SHARP SERVICE MANUAL

CODE: 00ZERA460VSME

ER-A460

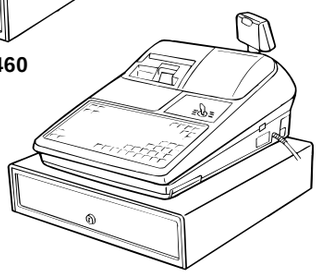

ER-A470

ELECTRONIC CASH REGISTER

ER-A460
MODEL ER-A470

SRV Key : LKGIM7113RCZZ
PRINTER: DP-730
(For "V" version)

CAUTION
EXTREME CAUTION MUST BE TAKEN WHEN SERVICING THIS MACHINE. EVEN THOUGH THE MODE SWITCH IS IN THE OFF POSITION, VOLTAGE IS STILL SUPPLIED TO THE ENTIRE MACHINE.
WHEN WORKING ON THIS MACHINE MAKE SURE THAT THE POWER CORD IS REMOVED FROM THE WALL OUTLET.

CONTENTS

CHAPTER 1. SPECIFICATIONS 1
CHAPTER 2. OPTIONS 6
CHAPTER 3. SRV. RESET AND MASTER RESET 9
CHAPTER 4. HARDWARE DESCRIPTION 10
CHAPTER 5. TEST FUNCTION 32
CHAPTER 6. DOWN LOAD FUNCTION 39
CHAPTER 7. CIRCUIT DIAGRAM & PWB LAYOUT 41

PARTS GUIDE

Parts marked with "! " is important for maintaining the safety of the set. Be sure to replace these parts with specified ones for maintaining the safety and performance of the set.

SHARP CORPORATION

This document has been published to be used for after sales service only.
The contents are subject to change without notice.

CHAPTER 1. SPECIFICATIONS

1. Appearance/Rating

1) Appearance

ER-A460

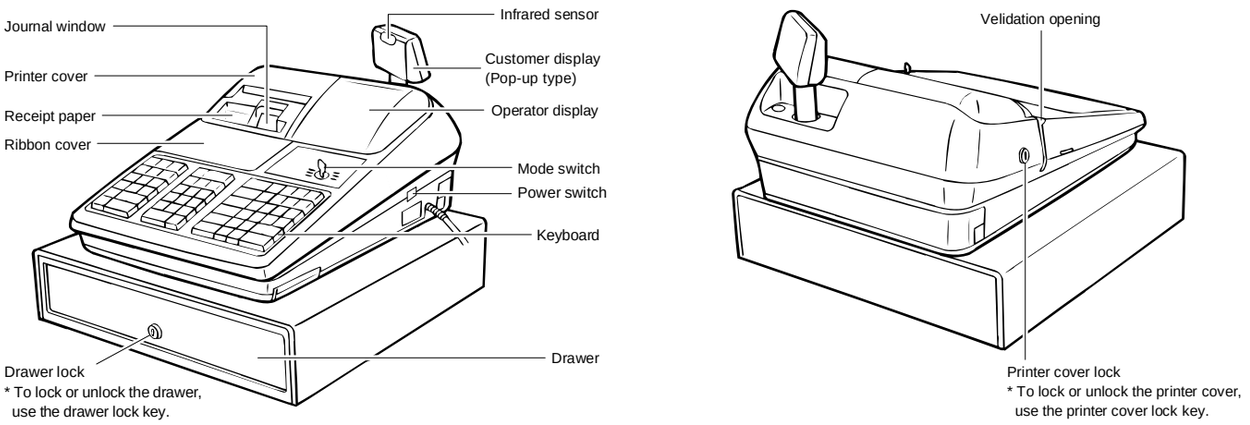

Fig. 1-1

ER-A470

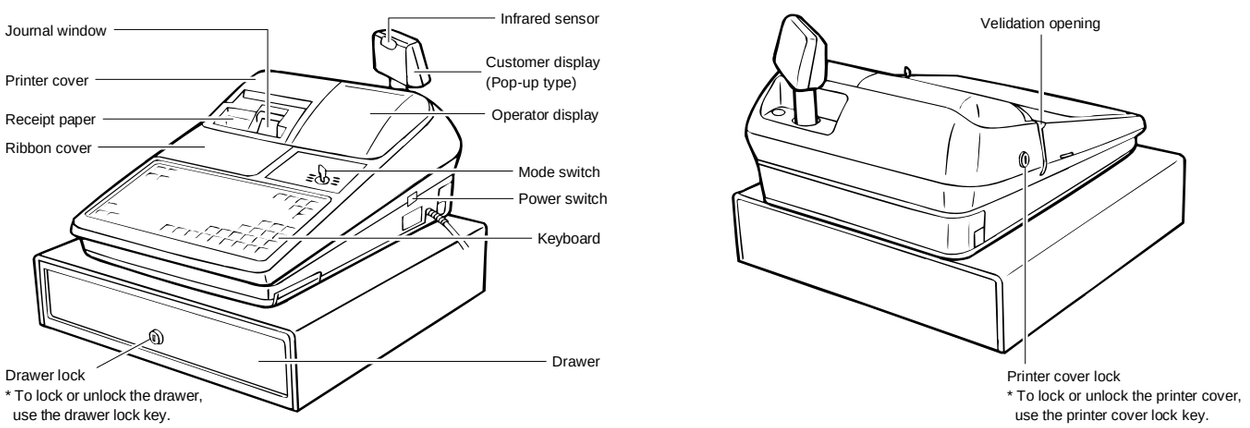

Fig. 1-2

2) Rating

Power source	AC local voltage (±10%) 60Hz
Power consumption	Standby: 7 W Maximum: 45 W with options installed.
Operating temperature	0˚C~40˚C (32˚F~104˚F)
Operating humidity	10%~90% (RH)
Physical dimensions, including the drawer	421(W) X 448(D) X 302(H)mm
Weight	13.4 kg

2. Keyboard

1) Standard keyboard layout

1 ER-A460

↑ RECEIPT	↑ JOURNAL	GC COPY		AMT	PLU/SUB			6	12	18	AUTO	CASH #
RCPT	VP	#		⊗	•	CL		5	11	17	EX1	EX2
NS	%1	%2		7	8	9		4	10	16	CR1	CR2
VAT	⊖1	⊖2		4	5	6		3	9	15	CH1	CH2
RA	RF			1	2	3		2	8	14	ST	
PO	∽			0		00		1	7	13	TL	

2 ER-A470

↑ RECEIPT	↑ JOURNAL	3	6	9	12	L3	8	16	24	32	40	48	56	64
RCPT	VP	2	5	8	11	L2	7	15	23	31	39	47	55	63
CASH #	VAT	1	4	7	10	L1	6	14	22	30	38	46	54	62
#	GC COPY	⊗	•	CL	AMT	CR2	5	13	21	29	37	45	53	61
⊖1	⊖2	7	8	9	PLU/ SUB	CR1	4	12	20	28	36	44	52	60
%1	%2	4	5	6	AUTO	CH	3	11	19	27	35	43	51	59
PO	RA	1	2	3	NS	EX1	2	10	18	26	34	42	50	58
RF	∽	0	00	000	ST	TL	1	9	17	25	33	41	49	57

Fig. 2-1

2) Key top name

1 Standard key top

KEY TOP	DESCRIPTION	ER-A460	ER-A470
0 to 9, 00	Numeric keys		
000	000 key	×	
↑RECEIPT	Receipt paper feed key		
↑JOURNAL	Journal paper feed key		
•	Deceimal point key		
⊗	Multiplication key		
CL	Clear key		
DEPT. 1 ~ 18	Department 1 ~ 18 keys		×
DEPT. 1 ~ 12	Department 1 ~ 12 keys	×	
PLU 1 ~ 64	Direct PLU 1 to 64 keys		×
PLU/SUB	PLU/SUB department key		
GC COPY	Guest check copy key		
VAT	Value added tax key		
VP	Validation print key		
#	Non-add code entry key		
CASH#	Cashier code entry key		
RCPT	Receipt print key		
$ 1	Discount 1 key		
$ 2	Discount 2 key		
AUTO	Automatic sequencing key		
%1	Percent 1 key		
%2	Percent 2 key		
EX1	Foreign currency exchange 1 key		
EX2	Foreign currency exchange 2 key		×
NS	No-sale key		
RA	Received on account key		
PO	Paid out key		
RF	Refund key		
"	Void key		
CR1	Credit 1 key		
CR2	Credit 2 key		
CH1	Cheque 1 key		×
CH2	Cheque 2 key		×
CH	Cheque key	×	
AMT	Amount key		
ST	Subtotal key		
TL	Total (cash total) key		
L1	PLU's level shift 1 key	×	
L2	PLU's level shift 2 key	×	
L3	PLU's level shift 3 key	×	

2 Option key top

KEY TOP	DESCRIPTION	ER-A460	ER-A470
L1	PLU's level shift 1 key		×
L2	PLU's level shift 2 key		×
L3	PLU's level shift 3 key		×
DEPT. 19 ~ 50	Department 19 ~ 50 keys		×
DEPT. 13 ~ 50	Department 13 ~ 50 keys	×	
PLU 1 ~ 82	Direct PLU 1 to 82 keys		×
PLU 65 ~ 118	Direct PLU 1 to 118 keys	×	
VAT SHIFT	Value added tax shift key		
% 3	Percent 3 key		
% 4	Percent 4 key		
$ 3	Discount 3 key		
$ 4	Discount 4 key		
AUTO 2	Automatic sequencing 2 key		
AUTO 3	Automatic sequencing 3 key		
AUTO 4	Automatic sequencing 4 key		
AUTO 5	Automatic sequencing 5 key		
RA 2	Received on account 2 key		
PO 2	Paid out 2 key		
CR3	Credit 3 key		
CR4	Credit 4 key		
CH3	Cheque 3 key		×
CH4	Cheque 4 key		×
CA2	Cash total 2 key		
EX2	Foreign currency exchange 2 key	×	
EX3	Foreign currency exchange 3 key		
EX4	Foreign currency exchange 4 key		
DIFFER ST	Difference subtotal key		

3. Mode switch

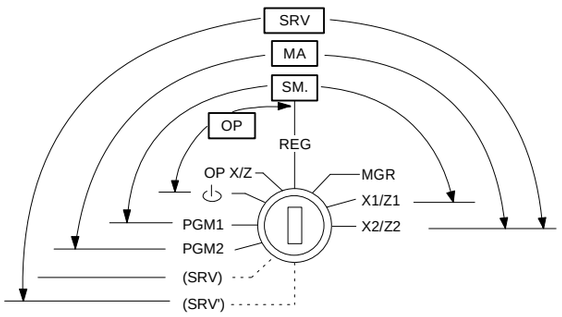

Fig. 3-1

* The key can be removed in the REG or OFF position.
* In the SRV' mode, key inputs are prohibited and no display is made.
* With the key in the off position power is still supplied to the main PWB.

[Functions]

- Function for each key position
- SRV': System reset
- SRV: Service mode (Service programming)
- PGM2: Allows programming of an item that is not changed frequently, in addition to the PGM1 mode programming.
- PGM1: Allows programming of items frequently changed (e.g. department, PLU pricing, and discount rate setting).
- OP/XZ: Allows X or Z operation by servers or cashiers.
- REG: Allows registrations.
- MGR: Allows the operations, by authorized person such as a manager (e.g. correction after transaction finished or cancellation of entry limits), which are not permitted to ordinary cashiers.
- X1/Z1: Allows reading and resetting of a day's sales total.
- X2/Z2: Allows reading or resetting sales totals in a specified period.
- & : Switches off the display to prevent keyboard entries.

  (The setting does not turn off the AC power.)

4. Display

1) Layout

1 Operator display

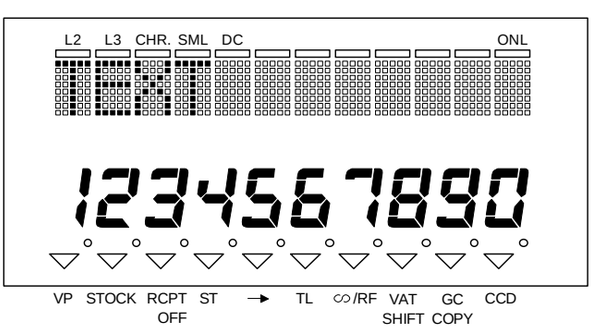

Fig. 4-1

	Dot display	7 segment display
No. of positions	12	10
Color of display	Green	Green
Character size	6.6 (H) × 4.6 (W) mm	10.0 (H) × 4.3 (W) mm

2 Customer display

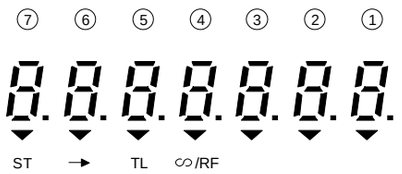

Fig. 4-2

No. of positions	7
Color of display	Green
Character size	10 (H) × 4.5 (W) mm

Lamps

Display contents	Description
L2	The lamp lights up when PLU level is 2.
L3	The lamp lights up when PLU level is 3.
CHR.	The lamp lights up when character key sheet mode in text setting
SML	The lamp lights up when small characters are being inputted in text setting
DC	The lamp lights up when double width characters are being inputted in text setting.
ONL	The lamp lights up when the machine is connected to the online transmission line; and it goes off when the machine is disconnected from the line. The lamp blinks during data transmission.
VP	The lamp lights up when Validation print is under compulsion.
STOCK	The lamp lights up when stock is empty state.
RCPT OFF	The lamp lights up when receipt is OFF state.
ST	The lamp lights up when a subtotal is displayed.
→	The lamp lights up when change amount is displayed after tendering.
TL	The lamp lights up when a transaction is finalized with CASH, CHECK, CREDIT, or CHARGE key, however, the lamp does not light up when a transaction is finalized with an amount tendered entry.
/RF	The lamp lights up when the void or refund key is pressed.
VAT SHIFT	The lamp lights up when the vat shift key is pressed.
GC COPY	The lamp lights up when the guest check copy mode.
CCD	The lamp lights up when the CCD registration.

5. Printer (DP-730)

1) Specifications

- Part number: DP-730
- No. of stations: 2
- Printing system: Mechanical serial dot
- Direction of printing: Bidirectional
- Printing capacity: Receipt – 24 characters
  Journal – 24 characters
  Validation – 55 characters (one line only)

- Character size: 2.4 (H) × 1.36 (W) mm
  Print pitch:
  Column distance 1.59 mm
  Row distance 5.08 mm
- Total number of dots: Receipt – 108 dots/216 positions
  Journal – 108 dots/216 positions
  Validation – 248 dots/495 positions
- Font: 7 × 7 dots (including half dot)
  Space between characters – 1 dot (2 positions)
- Distance between dots: 0.353 mm (H) × 0.353 mm (W)
- Journal near end sensor: Service route option
- Print speed: Approx. 3.0 lines/sec.
- Paper feed speed: Receipt – Approx. 30 lines/sec.
  Journal – Approx. 30 lines/sec.
- Reliability: MCBF – 400 million lines (excluding the print head)
  Head life – 10,000 characters (in the case of printing average 2 dots per character per wire
- Validation form sensor: Not setup

2) Printing area

Receipt/journal

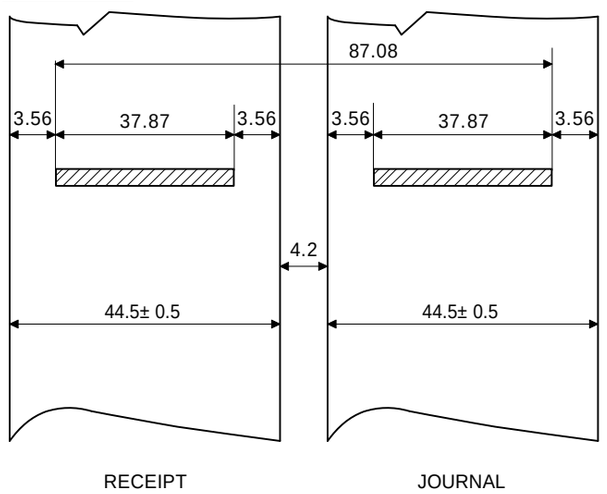

Unit : mm

Fig. 5-1

Validation form

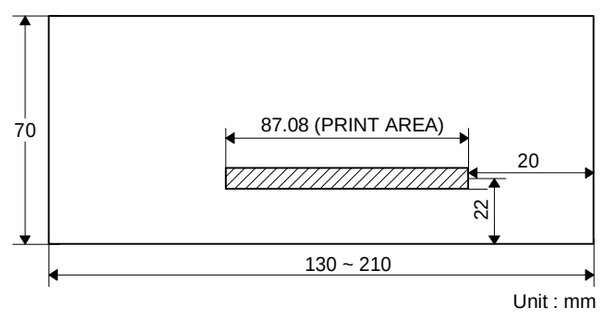

Unit : mm

Fig. 5-2

3) Paper

- Paper roll dimensions: 44.5±0.5mm in width, 83mm in diameter
- Paper quality: Journal
  Bond paper (paper thickness: 0.06 to 0.09mm, paper weight: 52.3 to 64g/m^2)
  Validation form
  Thickness: 0.07 to 0.14mm
  Size: 130mm or more (W) × 70mm or more (H)

4) Inking

- Ink supply system: Ink ribbon
- Form: Cartridge/Endless ribbon
- Specification: Material – Nylon
- Ribbon life: Approx. 6 million characters
- Print color: Purple (single color)

5) Logo stamp

- Material: Porous rubber
- Stamp color: Purple (single color)
- Max. stamp size: 30(W) × 20(H) mm
- Ink refill: Allowed (UINK-1001CCZZ: 5CC)

6) Cutter

- Method: Manual

6. Drawer

1) Specification

(1) Drawer box and drawer

Model name of the drawer box	SK423
Size	420 (W) × 426 (D) × 114 (H)
Color	Light olive gray
Material	Metal
Bell	—
Release lever	Standard equipment; situated at the bottom
Drawer open sensor	Standard equipment
Separation from the main unit	Allowed with service kit

2) Money case

Separation from the drawer	Allowed
Separation of the bill compartments from the coin compartments	Disallowed
Bill separator	—
Number of compartments	4B/8C

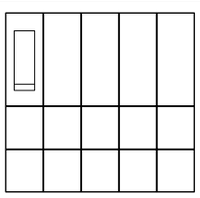

4B/8C

3) Lock

- Location of the lock: Front
- Method of locking and unlocking: To lock, insert the drawer lock key into the lock and turn it 90 degrees counterclockwise. To unlock, insert the drawer lock key and turn it 90 degrees clockwise.
- Key no.: SK1-1

CHAPTER 2. OPTIONS

1. System configuration

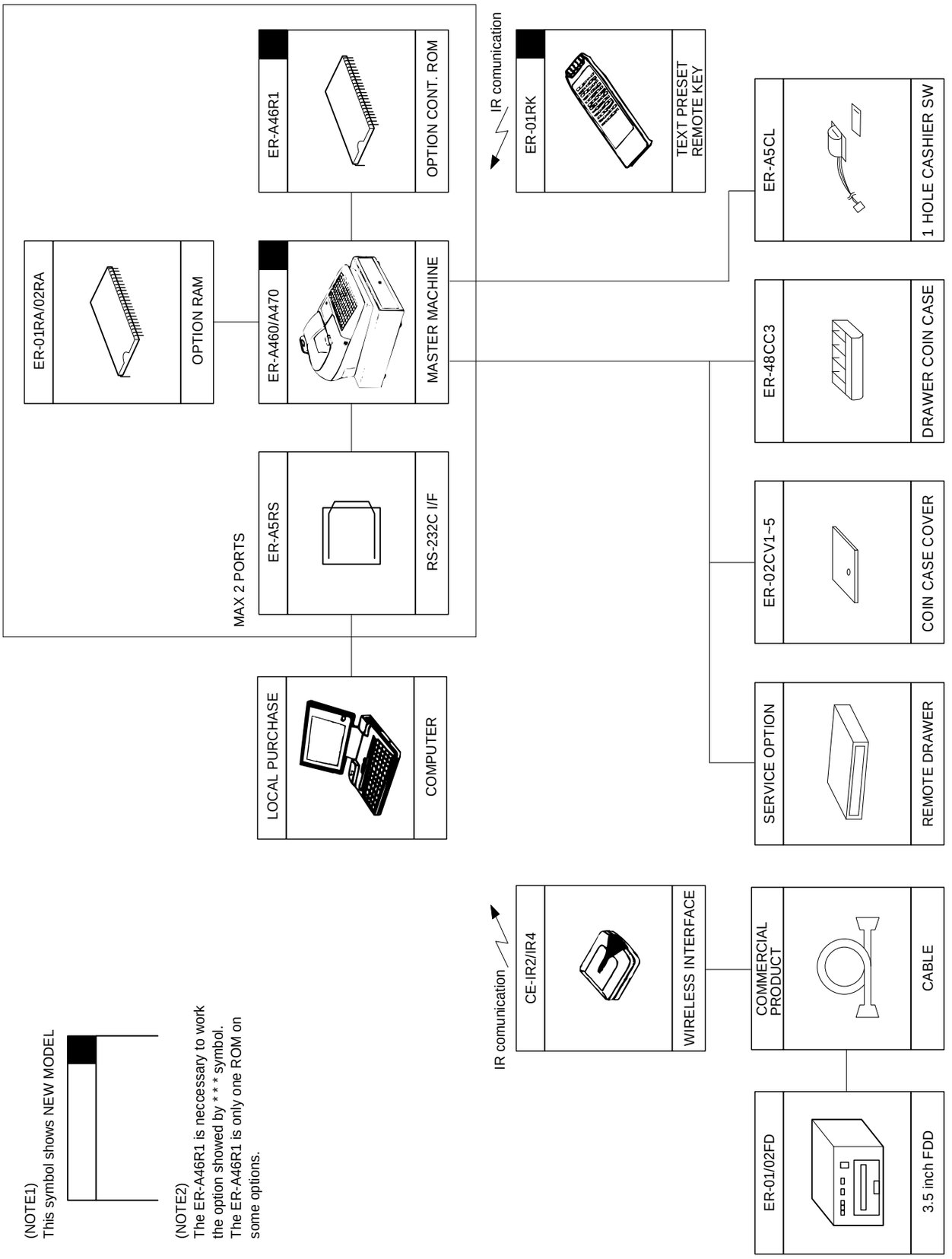

Fig. 1-1

(NOTE1)
This symbol shows NEW MODEL

(NOTE2)
The ER-A46R1 is neccessary to work the option showed by * * * symbol.
The ER-A46R1 is only one ROM on some options.

2. Options

NO	NAME	MODEL	DESCRIPTION
1	ONE HOLE CASHIER KEY	ER–A5CL	
2	EXPANSION RAM CHIP	ER–01RA	32K bytes RAM chip
		ER–02RA	128K bytes RAM chip
3	ON-LINE SYSTEM	ER–A5RS	2ports RS-232 I/F
4	CONTROL ROM	ER–A46R1	Control for ER-A5RS
5	PRESETS LOADER	ER–01FD/02FD	FD unit
6	KEY TOP KIT (For ER-A460)	ER–11KT7	1 X 1 key top
		ER–12KT7	1 X 2 key top
		ER–22KT7	2 X 2 key top
		ER–11DK7	1 X 1 dummy key
		ER–51DK7	5 X 1 dummy key
7	PROGRAMMING REMOTE KEYBOARD	ER–01RK	IR I/F text preset keyboard
8	WIRELESS INTERFACE	CE–IR2/IR4	For IR communication
9	COIN CASE	ER–48CC2	
10	COIN CASE COVER	ER–01CV1~01CV5	

3. Service options

NO.	NAME	PARTS CODE	PRICE RANK	DESCRIPTION	ER-A460	ER-A470
1	SERVICE KEY	LKGIM7113RCZZ	AK	For the mode switch	|	|
2	DRIP-PROOF SWITCH COVER	GCOVB7108BHZZ	BA		|	|
3	MODE KEY GRIP COVER	LKGIM7126RCZZ	AL	OP key only	|	|
4	DRIP-PROOF KEYBOARD COVER	GCOVB7109BHZZ	BF		|	X
5	JOURNAL NEAR END SENSOR	DUNT–4945BHZZ	AY		|	|
6	PROGRAMMING CHARACTER KEYBOARD COVER	GCOVB7110BHZA	BE		|	X
7	REMOTE DRAWER	CBŌXD7136BH01	BU		|	|
8	CLERK COVER "B"	GCOVA7107BHZB	AG	For ER-A5CL	|	|
	CLERK ANGLE	LANGT7581BHZZ	AM		|	|

4. Service tools

NO.	NAME	PARTS CODE	PRICE RANK
1	EXPANSION PWB	CKOG–6708RCZZ	BU
2	RS-232 LOOP BACK CONNECTOR FOR ER-A5RS	UKOG–6705RCZZ	BU
3	KEY TOP REMOVER (For ER-A460)	UKOG-6634RCZZ	AX

5. Supplies

NO.	NAME	PARTS CODE	PRICE RANK	DESCRIPTION
1	ROLL PAPER	DPAPR1006CSZZ	AR	5rolls/pack
2	INK RIBBON	PRBN–6644RCZZ	AZ	
3	INK FOR STAMP	UINK–1001CCZZ	AK	5 cc
4	KEY SHEET (For ER-A470)	PSHEK6830BHZZ	AU	Programming character sheet
		PSHEK6829BHZZ	AR	Standard character sheet
		PSHEK6828BHZZ	AK	Blank character sheet

6. Options

For installation of the options, refer to the Installation Manual which is issued separately.

7. How to use service tools

7-1. Expansion PWB: CKOG-6708RCZZ

- External view

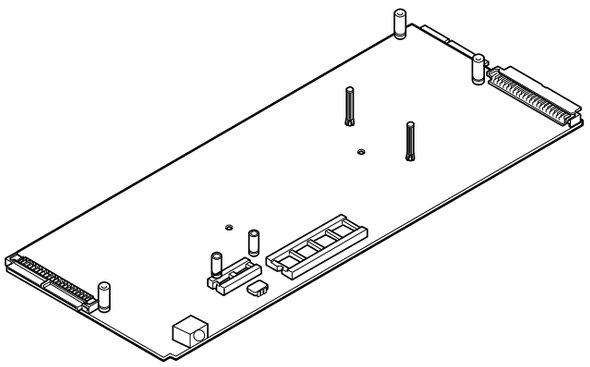

Fig. 7-1

Purpose 1: Used for servicing and repairing of options (such as the and the ER-A5RS) which are connected with the main body option connector.

[Procedure 1]
Use an insulator base as shown in Fig. 7-2 (shaded section) and perform servicing.

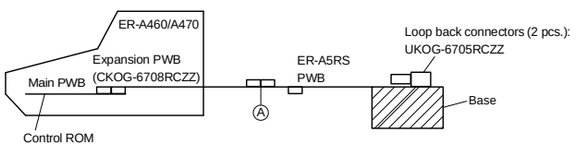

Fig. 7-2

To check the option I/F PWB from the solder side, connect the I/F PWB to OPTCN2. To check from the parts side, connect to OPTCN3.

(Note) The option I/F PWB should be held horizontally so that no excessive stress is applied to connecting section A in Fig. 7-2.

[Procedure 2]

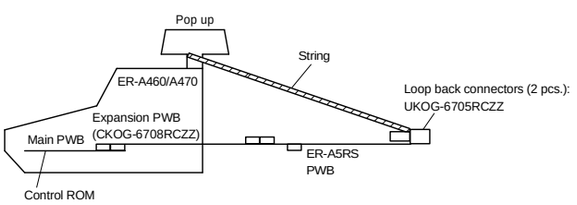

Fig. 7-3

Put a string between the pop up and the option PWB, as shown in Fig. 7-3. Adjust the length of the string so that the CKOG-6708RCZZ and the option PWB are not binding. Then perform servicing.

CHAPTER 3. SRV. RESET AND MASTER RESET

1. SRV. reset (Program Loop Reset)

Used to return the machine back to its operational state after a lock-up has occurred.

Procedure

- Method 1
  1) Unplug the AC cord from the wall outlet.
  2) Set the mode switch to (SRV′) position.
  3) Plug in the AC cord to the wall outlet.
  4) Turn to (SRV) position from (SRV′) position.
- Method 2
  1) Set the mode switch to PGM2 position.
  2) Turn off the AC switch.
  3) While holding down JOURNAL FEED key and RECEIPT FEED key, Turn on the AC switch.

Note: When disassembling and reassembling always power up using method 1 only. Method 2 will not reset the CKDC6.

Note: SRV programming job#926-B must be set to "4" to allow PGM program loop reset.

2. Master reset (All memory clear)

There are two possible methods to perform a master reset.

- MRS-1

Used to clear all memory contents and return machine back to its initial settings and return keyboard back to default keyboard.

Procedure

1) Unplug the AC cord from the wall outlet.
2) Set the MODE switch to the (SRV′) position.
3) Plug in the AC cord to the wall outlet.
4) While holding down JOURNAL FEED key, turn to (SRV) position from (SRV′) position.

- MRS-2

  Used to clear all memory and keyboard contents.
  This reset returns all programming back to defaults. The keyboard must be entered by hand.
  This reset is used if an application needs different keyboard layout other than that supplied by a normal MRS-1.

Procedure

1) Unplug the AC cord from the wall outlet.
2) Set the MODE switch to the (SRV′) position.
3) Plug in the AC cord to the wall outlet.
4) While holding down JOURNAL FEED key and RECEIPT FEED key, turn to (SRV) position from (SRV′) position.
5) Key position assignment:

* After the execution of MRS-2, only the RECEIPT FEED and JOURNAL FEED keys can remain effective on key assignment. Any key can be assigned on any key position on the main keyboard.

[key setup procedure]

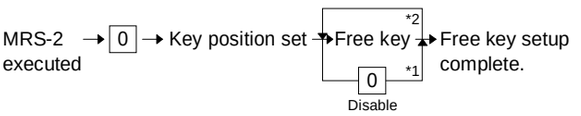

NOTES:

* 1: When the 0 key is pressed, the key of the key number on display is disabled.

* 2: Push the key on the position to be assigned. With this, the key of the key number on display is assigned to that key position.

Key number	Key name	Key number	Key name
1	Numeric key "0"	9	Numeric key "8"
2	Numeric key "1"	10	Numeric key "9"
3	Numeric key "2"	11	Numeric key "00"
4	Numeric key "3"	13	Decimal point key
5	Numeric key "4"	14	CL key
6	Numeric key "5"	15	@/FOR key
7	Numeric key "6"	16	SBTL key
8	Numeric key "7"	17	CA/AT key

CHAPTER 4. HARDWARE DESCRIPTION

1. Hard ware block diagram

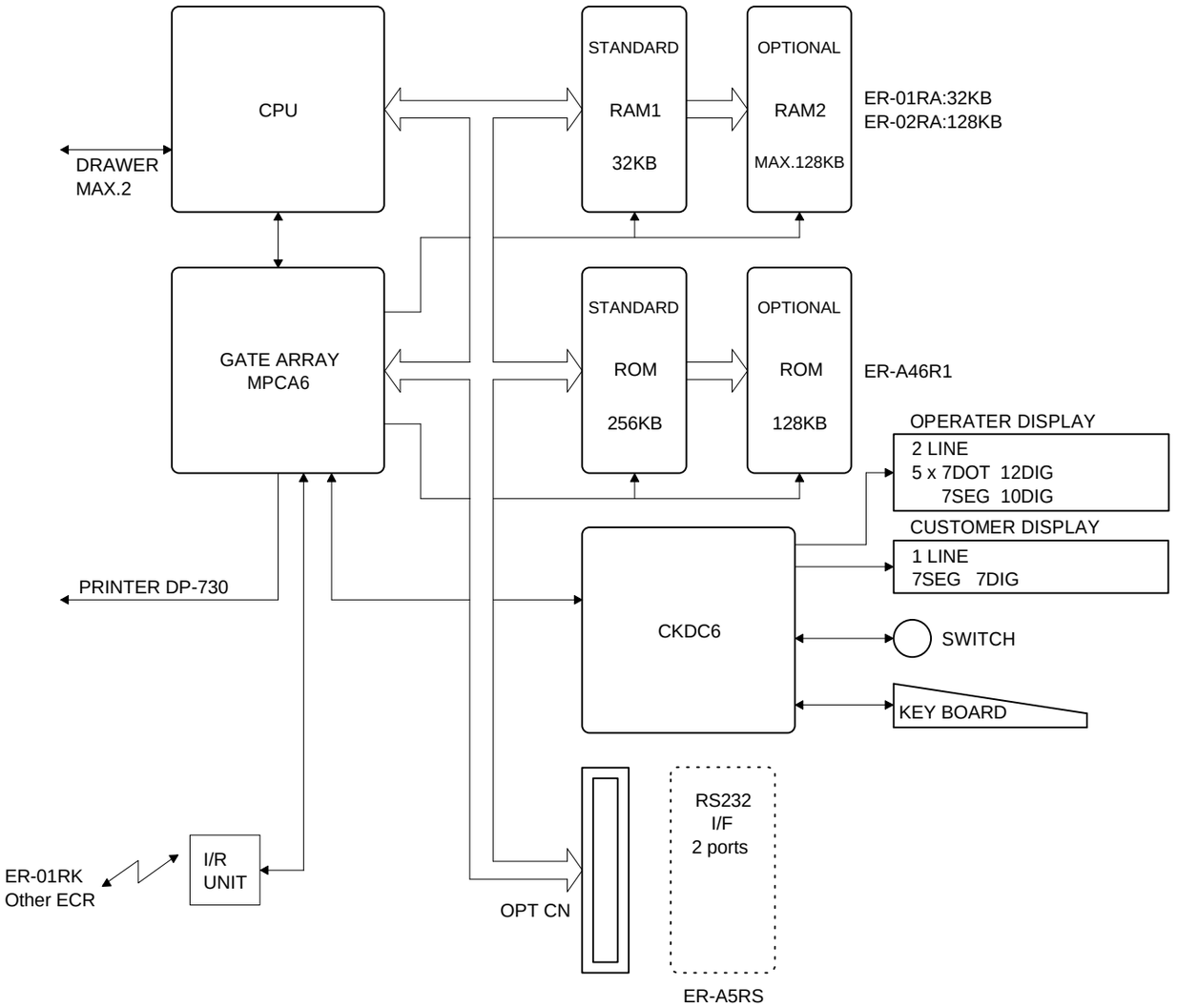

Fig. 1-1

2. Description of main LSI's

2-1. CPU (HD6415108FX)

1) Pin configuration

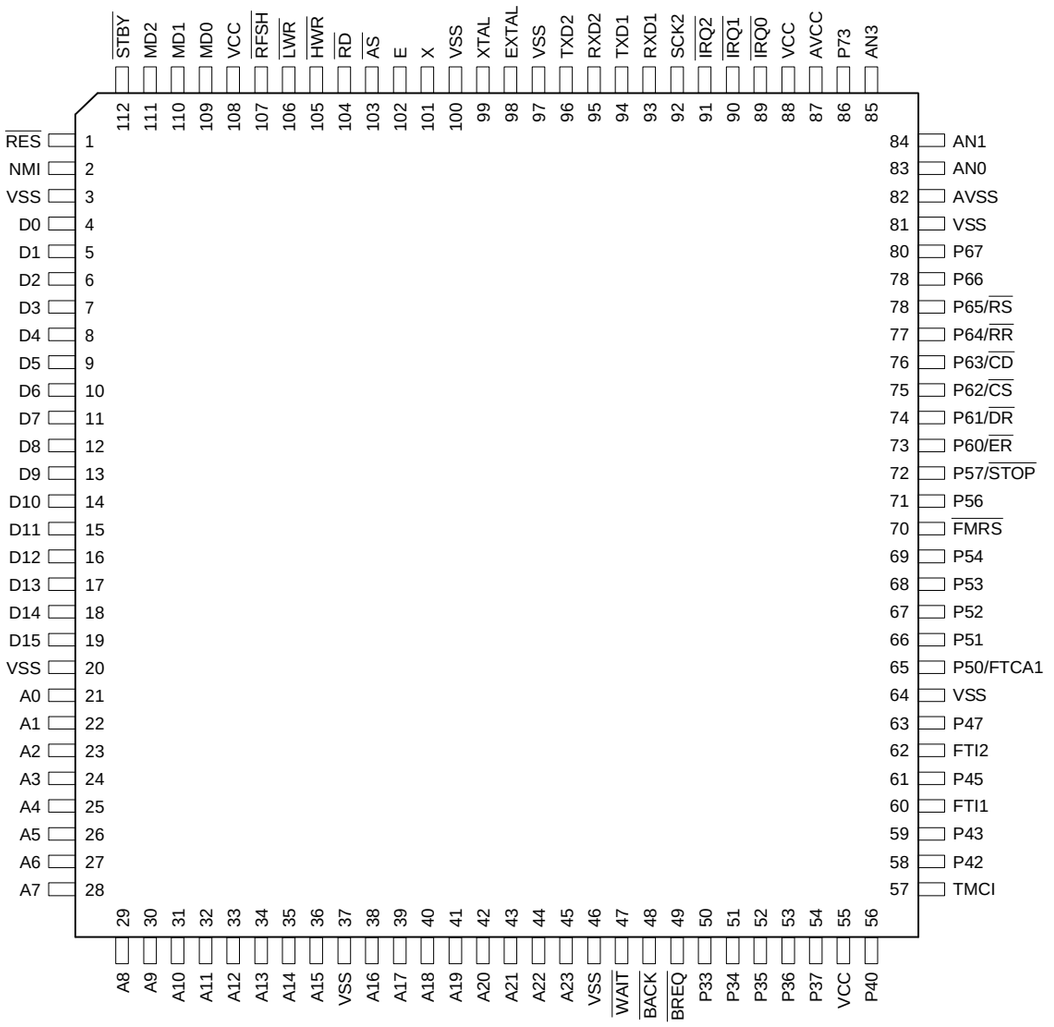

HD6415108FX pin configuration

Fig. 2-1

2) Block diagram

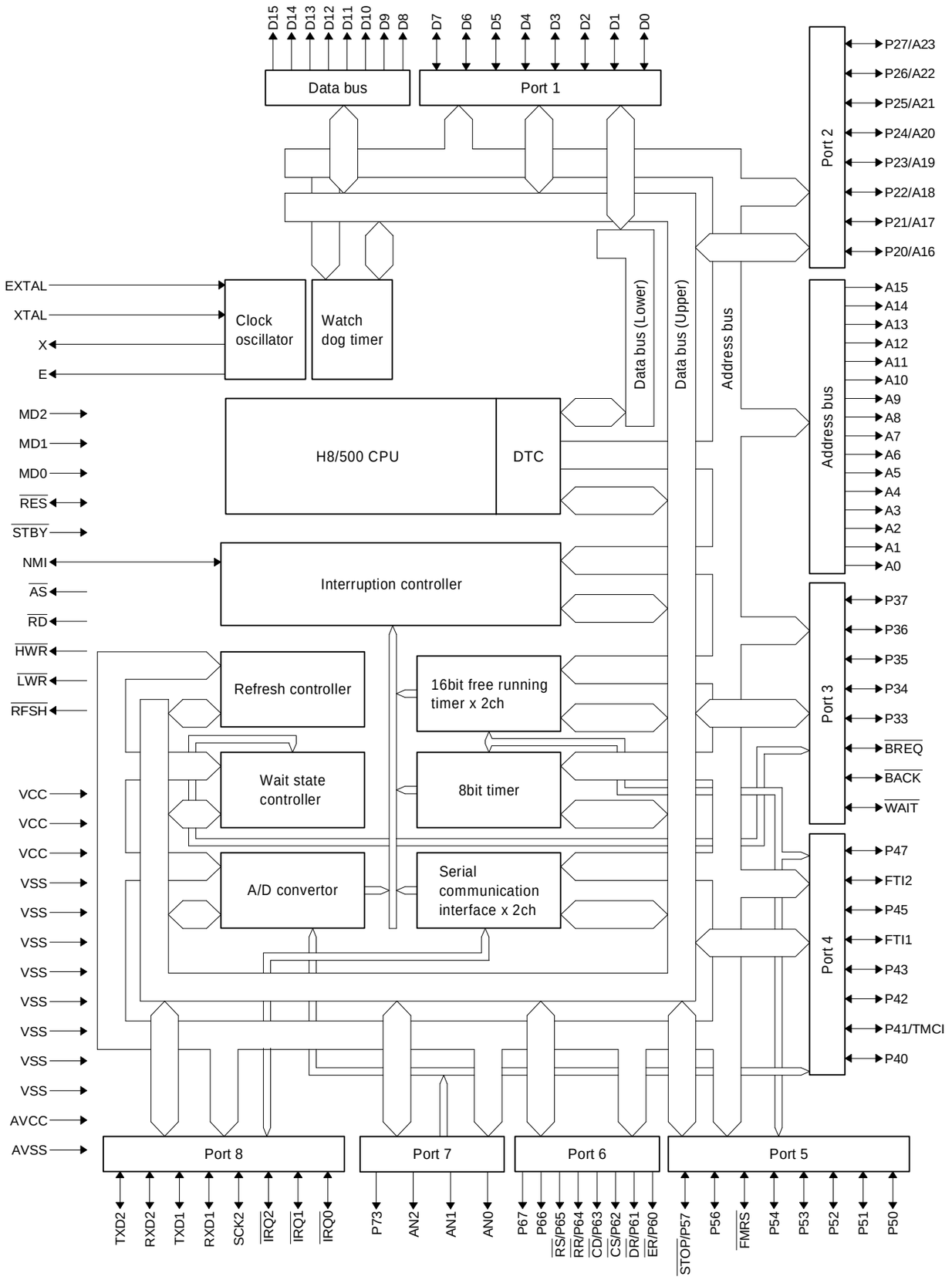

Fig. 2-2

3) Pin description

Pin No.	Symbol	Signal name	In/ Out	Function
1	$\overline{RES}$	$\overline{RESET}$	I/O	Reset input
2	NMi	NMi	In	Non-maskable interrupt input for SSP interrupt input.
3	VSS	NU	In	GND
4	D0	Nu	In	GND
5	D1	Nu	In	GND
6	D2	Nu	In	GND
7	D3	Nu	In	GND
8	D4	Nu	In	GND
9	D5	Nu	In	GND
10	D6	Nu	In	GND
11	D7	Nu	In	GND
12	D8	D0	I/O	Data bus
13	D9	D1	I/O	Data bus
14	D10	D2	I/O	Data bus
15	D11	D3	I/O	Data bus
16	D12	D4	I/O	Data bus
17	D13	D5	I/O	Data bus
18	D14	D6	I/O	Data bus
19	D15	D7	I/O	Data bus
20	VSS	NU	In	GND
21	A0	A0	Out	Address bus
22	A1	A1	Out	Address bus
23	A2	A2	Out	Address bus
24	A3	A3	Out	Address bus
25	A4	A4	Out	Address bus
26	A5	A5	Out	Address bus
27	A6	A6	Out	Address bus
28	A7	A7	Out	Address bus
29	A8	A8	Out	Address bus
30	A9	A9	Out	Address bus
31	A10	A10	Out	Address bus
32	A11	A11	Out	Address bus
33	A12	A12	Out	Address bus
34	A13	A13	Out	Address bus
35	A14	A14	Out	Address bus
36	A15	A15	Out	Address bus
37	VSS	NU	In	GND
38	A16	A16	Out	Address bus
39	A17	A17	Out	Address bus
40	A18	A18	Out	Address bus
41	A19	A19	Out	Address bus
42	A20	A20	Out	Address bus
43	A21	A21	Out	Address bus
44	A22	A22	Out	Address bus
45	A23	A23	Out	Address bus
46	VSS	NU	In	GND
47	$\overline{WAIT}$	$\overline{WAIT}$	In	Wait signal
48	$\overline{BACK}$	$\overline{BACK}$	Out	Bus control request acknowledge
49	$\overline{BREQ}$	$\overline{BREQ}$	In	Bus control request
50	P33	DOPS	In	Drawer open signal
51	P34	$\overline{DR0}$	Out	Option drawer open signal
52	P35	$\overline{DR1}$	Out	Remote drawer No.1 open signal

Pin No.	Symbol	Signal name	In/ Out	Function
53	P36	$\overline{DR2}$	Out	Remote drawer No.2 open signal (NU)
54	P37	$\overline{DR3}$	Out	Remote drawer No.3 open signal (NU): GND
55	VCC	VCC	In	+5V
56	P40	$\overline{IFV}$	In	Slip printer (M-240) interface connect signal (NU)
57	TMCi	$\overline{PTMG}$	In	Printer (DP-730) timing signal
58	P42	$\overline{TOF}$	In	Slip printer (M-240) TOF sensor signal (NU)
59	P43	$\overline{BOF}$	In	Slip printer (M-240) BOF sensor signal (NU)
60	FTi1	$\overline{PRST}$	In	Printer (DP-730) reset signal
61	P45	$\overline{NEJ}$	In	Near end sensor journal side
62	FTi2	$\overline{SHEN}$	In	CKDC Interface shift enable signal
63	P47	$\overline{NER}$	In	Near end sensor receipt side
64	VSS	VSS	In	GND
65	P50/FTCA1	TRGI	Out	Dot pulse adjust signal
66	P51	NU	Out	NC
67	P52	NU	Out	NC
68	P53	NU	In	GND
69	P54	NU	Out	NC
70	$\overline{FMRS}$	NU	In	NC
71	P56	NU	Out	NC
72	P57/$\overline{STOP}$	$\overline{STOP}$	Out	System reset output. Normally
73	P60/$\overline{ER}$	$\overline{ERS}$/$\overline{ER}$	Out	SIO control signal (Equipment ready) (NU)
74	P61/$\overline{DR}$	$\overline{DRS}$/$\overline{DR}$	In	SIO control signal (Data set ready) (NU)
75	P62/$\overline{CS}$	$\overline{CSS}$/$\overline{CS}$	In	SIO control signal (Clear to send) (NU)
76	P63/$\overline{CD}$	$\overline{CDS}$/$\overline{CD}$	In	SIO control signal (Carrier detect) (NU)
77	P64/$\overline{RR}$	$\overline{RRS}$/$\overline{RR}$	Out	SIO control signal (Ready to receive) (NU)
78	P65/$\overline{RS}$	$\overline{RSS}$/$\overline{RS}$	Out	SIO control signal (Request to send) (NU)
79	P66	RCO	In	Remote keyboard input signal
80	P67	HP	In	Printer home position signal
81	VSS	NU	In	GND
82	AVSS	NU	In	GND
83	AN0	VPJ	In	Validation sensor journal
84	AN1	VPR	In	Validation sensor receipt (NU)
85	AN3	VPTEST	In	+24V test input
86	P73	$\overline{VPPS}$	In	Validation sense signal (NU)
87	AVCC	AVCC	In	+5V
88	VCC	VCC	In	+5V
89	$\overline{IRQ0}$	$\overline{IRQ0}$	In	Interrupt signal 0
90	$\overline{IRQ1}$	$\overline{IRQ1}$	In	Interrupt signal 1 (RS-232C)
91	SCK1	UASCK	In	I/R control signal (Shift clock)
92	SCK2	SCK2	In	CKDC Interface sync shift clock
93	RXD1	/UARX	In	I/R control signal (Receive data)
94	TXD1	/UATX	Out	I/R control signal (Transmit data)

Pin No.	Symbol	Signal name	In/ Out	Function
95	RXD2	RXD2	In	CKDC Interface shift input data
96	TXD2	TXD2	Out	CKDC Interface shift output data
97	VSS	NU	In	GND
98	EXTAL	EXTAL	In	Crystal oscillator connection
99	XTAL	XTAL	In	Crystal oscillator connection
100	VSS	NU	In	GND
101	X	X	Out	System clock
102	E	NU	Out	Nu
103	$\overline{AS}$	$\overline{AS}$	Out	Address strobe
104	$\overline{RD}$	$\overline{RD}$	Out	Read
105	$\overline{HWR}$	$\overline{WR}$	Out	Write
106	$\overline{LWR}$	$\overline{LWR}$	Out	Nu
107	$\overline{RFSH}$	$\overline{RFSH}$	Out	Refresh cycle
108	VCC	VCC	In	+5V
109	MD0	MD0	In	+5V (MODE 3)
110	MD1	MD1	In	+5V (MODE 3)
111	MD2	MD2	In	GND (MODE 3)
112	$\overline{STBY}$	$\overline{STBY}$	In	+5V (Nu)

2-2. G.A (MPCA6)

1) Pin configuration

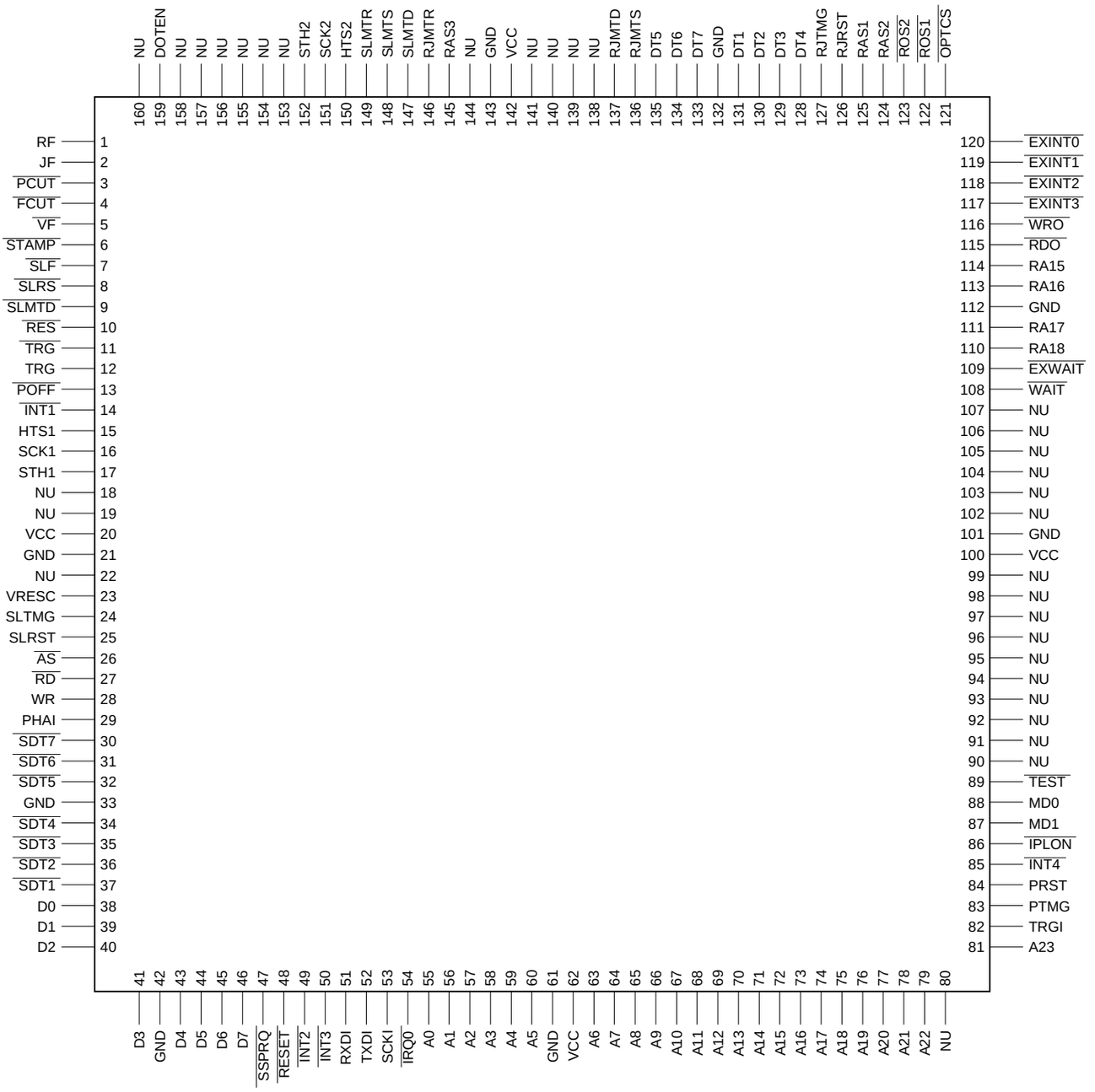

GATE ARRAY (F258016PC)
MPCA5

Fig. 2-3

2) Block diagram

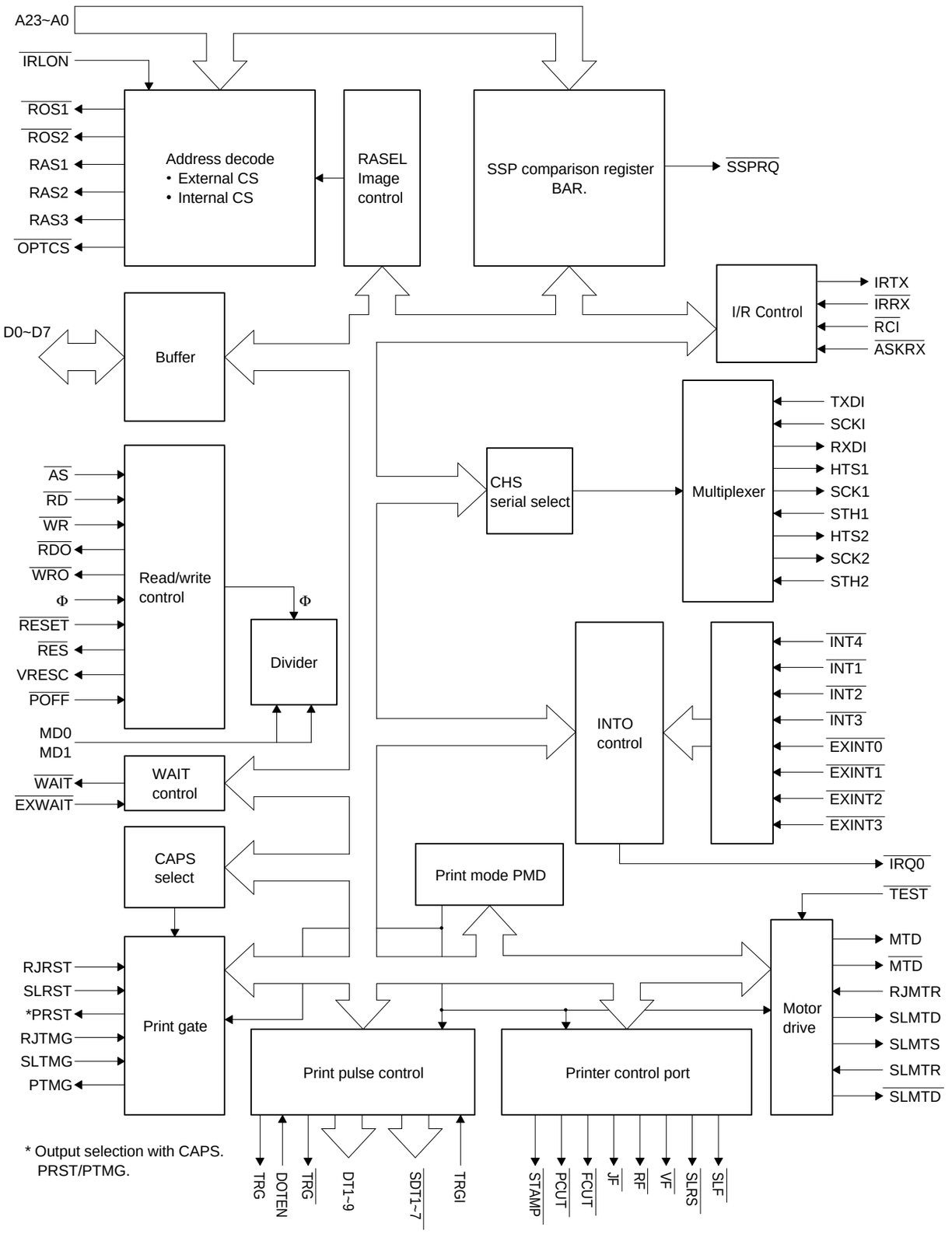

Fig. 2-4

3) Pin description

Pin No.	Signal name	In/ Out	Function
1	RF	Out	Receipt side paper feed solenoid
2	JF	Out	Journal side paper feed solenoid
3	$\overline{PCUT}$	Out	Printer partial cut signal (NU)
4	$\overline{FCUT}$	Out	Printer auto cut signal (NU)
5	$\overline{VF}$	Out	Multi line validation paper feed (NU)
6	$\overline{STAMP}$	Out	Printer stamp signal (NU)
7	$\overline{SLFS}$	Out	Slip printer paper feed singnal (NU)
8	$\overline{SLRS}$	Out	Slip printer release signal (NU)
9	$\overline{SLMTD}$	Out	Slip printer motor drive signal (NU)
10	$\overline{RES}$	Out	Peripheral output reset
11	$\overline{TRG}$	Out	Dot head trigger signal (NU)
12	TRG	Out	Dot head trigger signal
13	$\overline{POFF}$	In	Power off signal input
14	$\overline{INT1}$	In	Interrupt signal (Key interrupt request)
15	HTS1	Out	8 bit serial port output
16	SCK1	Out	Serial port shift clock output
17	STH1	In	8 bit serial port input
18	RAS VZ	—	Chip select (NU)
19	—	—	Nu
20	VCC	—	+5V
21	GND	—	GND
22	INTMCR	—	Interrupt (NU)
23	VRESC	Out	Turns active when reset and power down is met
24	SLTMG	In	Slip printer timing signal (NU)
25	SLRST	In	Slip printer reset signal (NU)
26	$\overline{AS}$	In	Address strobe
27	$\overline{RD}$	In	Read strobe
28	$\overline{WR}$	In	Write strobe
29	ϕ	In	(ϕ) System clock (7.3728 MHz)
30	$\overline{SDT7}$	Out	Slip printer printhead drive signal (dot7) (NU)
31	$\overline{SDT6}$	Out	Slip printer printhead drive signal (dot6) (NU)
32	$\overline{SDT5}$	Out	Slip printer printhead drive signal (dot5) (NU)
33	GND	—	GND
34	$\overline{SDT4}$	Out	Slip printer printhead drive signal (dot4) (NU)
35	$\overline{SDT3}$	Out	Slip printer printhead drive signal (dot3) (NU)
36	$\overline{SDT2}$	Out	Slip printer printhead drive signal (dot2) (NU)
37	$\overline{SDT1}$	Out	Slip printer printhead drive signal (dot1) (NU)
38	D0	I/O	Data bus 0
39	D1	I/O	Data bus 1
40	D2	I/O	Data bus 2
41	D3	I/O	Data bus 3
42	GND	—	GND
43	D4	I/0	Data bus 4
44	D5	I/0	Data bus 5
45	D6	I/0	Data bus 6
46	D7	I/0	Data bus 7
47	$\overline{SPRQ}$	Out	SSP interrupt request to CPU
48	$\overline{RESET}$	In	MPCA reset
49	$\overline{INT2}$	In	Interrupt signal (Nu)

Pin No.	Signal name	In/ Out	Function
50	$\overline{INT3}$	In	Interrupt signal (Nu)
51	RXD2	Out	8 bit serial port output to CPU
52	TXD2	In	8 bit serial port input from CPU
53	SCK2	In	Serial port shift clock input from CPU.
54	$\overline{IRQ0}$	Out	Interrupt request to CPU
55	A0	In	Address bus 0
56	A1	In	Address bus 1
57	A2	In	Address bus 2
58	A3	In	Address bus 3
59	A4	In	Address bus 4
60	A5	In	Address bus 5
61	GND	—	GND
62	VCC	—	+5V
63	A6	In	Address bus 6
64	A7	In	Address bus 7
65	A8	In	Address bus 8
66	A9	In	Address bus 9
67	A10	In	Address bus 10
68	A11	In	Address bus 11
69	A12	In	Address bus 12
70	A13	In	Address bus 13
71	A14	In	Address bus 14
72	A15	In	Address bus 15
73	A16	In	Address bus 16
74	A17	In	Address bus 17
75	A18	In	Address bus 18
76	A19	In	Address bus 19
77	A20	In	Address bus 20
78	A21	In	Address bus 21
79	A22	In	Address bus 22
80	$\overline{LCDC}$	—	LCD CS (NU)
81	A23	In	Address bus 23
82	TRGI	In	Dot pulse control/drive signal
83	$\overline{PTMG}$	Out	Printer timing signal
84	$\overline{PRST}$	Out	Printer reset signal
85	$\overline{INT4}$	In	Interrupt signal (NU)
86	$\overline{IPLON}$	In	To option connector
87	MD1	In	Mode select input (+5V)
88	MD0	In	Mode select input (GND)
89	$\overline{TEST}$	In	+5V
90	MA15	—	Image address 15 (NU)
91	MA18	—	Nu
92	MA19	—	Nu
93	RCVRDY1	—	Nu
94	RCVRDY2	—	Nu
95	RC0	—	Remote control encord signal for CPU
96	IRTX	—	I/R output for LED
97	UASCK	—	I/R serial data shift clock
98	$\overline{UARX}$	—	I/R serial data for CPU
99	$\overline{UATX}$	—	I/R serial data from CPU
100	VCC	—	+5V
101	GND	—	GND
102	$\overline{IRRX}$	—	I/R input from I/R unit
103	$\overline{RCI}$	—	I/R input from I/R unit
104	DAX1	—	System clock (7.3728MHz)

Pin No.	Signal name	In/ Out	Function	
105	DAX2	—	Nu	
106	$\overline{\text{MCR1}}$	—	Nu	
107	$\overline{\text{MCR2}}$	—	Nu	
108	$\overline{\text{WAIT}}$	Out	Wait request signal	
109	$\overline{\text{EXWAIT}}$	In	External wait control input signal	
110	RA18	Out	Nu	
111	RA17	Out	Nu	
112	GND	—	GND	
113	RA16	Out	Nu	
114	RA15	Out	Nu	
115	$\overline{\text{RDO}}$	Out	Expansion RD signal	Option
116	$\overline{\text{WRO}}$	Out	Expansion WR signal	
117	$\overline{\text{EXINT3}}$	In	Expansion interruption signal 3	Option
118	$\overline{\text{EXINT2}}$	In	Expansion interruption signal 2	
119	$\overline{\text{EXINT1}}$	In	Expansion interruption signal 1	
120	$\overline{\text{EXINT0}}$	In	Expansion interruption signal 0	
121	$\overline{\text{OPTCS}}$	Out	Chip select base signal for expansion option	
122	$\overline{\text{ROS1}}$	Out	ROM 1 chip select signal	
123	$\overline{\text{ROS2}}$	Out	ROM 2 chip select signal	
124	RAS2	Out	RAM 2 chip select signal	
125	RAS1	Out	RAM 1 ship select signal	
126	RJRST	In	Printer reset signal	
127	RJTMG	In	Printer timing signal	
128	DT4	Out	Printer dot signal 4	
129	DT3	Out	Printer dot signal 3	
130	DT2	Out	Printer dot signal 2	
131	DT1	Out	Printer dot signal 1	
132	GND	—	GND	
133	DT7	Out	Printer dot signal 7	
134	DT6	Out	Printer dot signal 6	
135	DT5	Out	Printer dot signal 5	
136	$\overline{\text{MTD}}$	Out	Printer motor $\overline{\text{drive}}$ signal	
137	MTD	Out	Printer motor drive signal	
138	DOT9	—	Printer dot signal 9 (NU)	
139	DOT8	—	Printer dot signal 8 (NU)	
140	SYNC	—	Nu (+5V)	
141	$\overline{\text{ASKRX}}$	—	I/R input from I/R unit	
142	VCC	—	+5V	
143	GND	—	GND	
144	—	—	Nu	
145	RAS3	Out	Nu	
146	RJMTR	In	Printer motor lock detection signal (NU)	
147	SLMTD	In	Nu	
148	SLMTS	In	Nu	
149	SLMTR	In	GND	
150	HTS2	Out	Nu	
151	SCK2	Out	Nu	
152	STH2	In	Nu	
153	—	—	Nu	
154	—	—	Nu	
155	—	—	Nu	
156	—	—	Nu	
157	—	—	Nu	
158	LCDWT	—	Nu	
159	DOTEN	Out	Dot drive enable signal	
160	RASP	—	Nu	

2-3. CKDC6 (HD404728A91FS)

1) General description

The CKDC6 is a 4-bit microcomputer developed for the ER-A460/A470 and provides functions to control the real-time clock, keys, and displays. The basic functions of the CKDC6 are shown below.

Keys: The CKDC6 is capable of controlling a maximum of 256 momentary keys. (Sharp 2-key rollover control)
Simultaneous scanning of key and switch
(When a key is scanned, the state of a mode and clerk switch is also buffered. The host can scan the state of switch together with the key entry data at the same time the key is scanned.)

Switches: Mode switch with 14 positions maximum
8-bit clerk (cashier) switch
2-bit feed switch
1-bit receipt on/off switch
1-bit option switch
4-bit general-purpose switch (1-bit is used for keyboard select)

Displays: 16-column dot display
12-column 7-segment display (column digit selectable)
All column blink controlled for the dot and 7-segment display decimal point and indicators
Programmable patterns for 7-segment display:
Four patterns
Internal driver for 7-segment display

Buzzer: Single tone control

Clock: Year, month, day of month, day of week, hour, minute

Alarm: Hour, minute

Interrupt request (event control):
Detection of key input, switch position change, alarm issue, and counter overflow

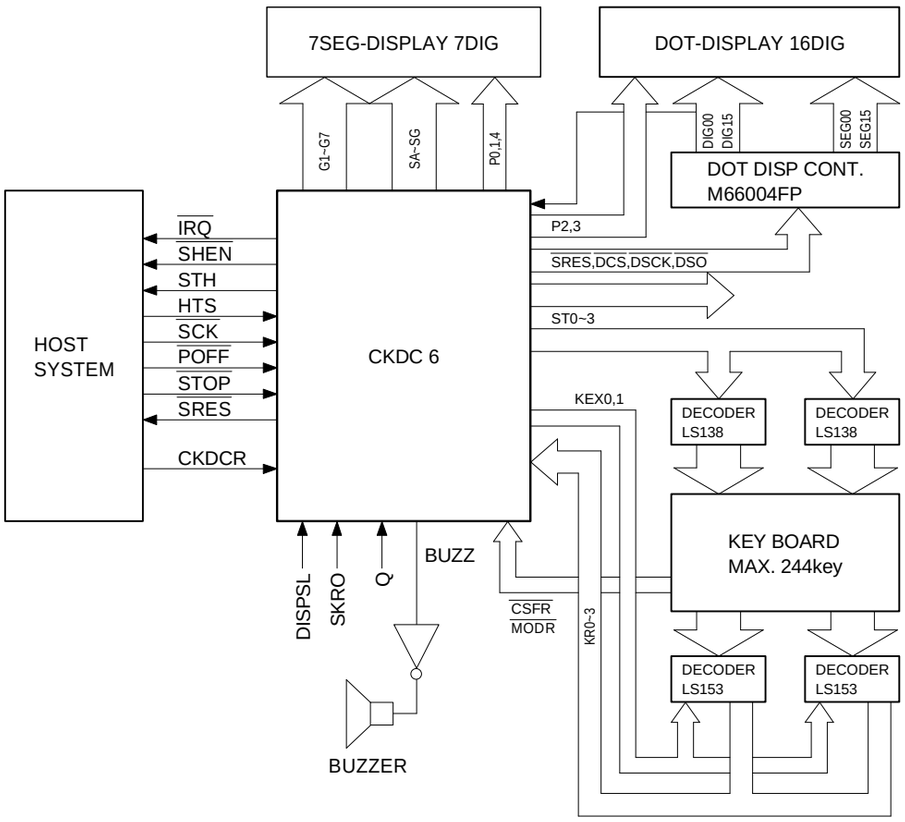

Fig. 2-5

2) Pin assignment

Pin No.	Port	I/O	RESET State	Signal name	I/O	Notes	PULL–UP –DOWN
1	$R0_1$	I/O	H-Z	SB	O	DB4 : SEG-B	PULL-DOWN
2	$R0_2$	I/O	H-Z	SC	O	DB4 : SEG-C	PULL-DOWN
3	$R0_3$	I/O	H-Z	SD	O	DB4 : SEG-D	PULL-DOWN
4	$R1_0$	I/O	H-Z	SE	O	DB4 : SEG-E	PULL-DOWN
5	$R1_1$	I/O	H-Z	SF	O	DB4 : SEG-F	PULL-DOWN
6	$R1_2$	I/O	H-Z	SG	O	DB4 : SEG-G	PULL-DOWN
7	$R1_3$	I/O	H-Z		O	DB7 : 7SEG COM	PULL-DOWN
8	$R2_0$	I/O	H-Z		O	DB2 : DOT DP	PULL-DOWN
9	$R2_1$	I/O	H-Z		O	DB3 : DOT COM	PULL-DOWN
10	$R2_2$	I/O	H-Z	DP	O	DB5 : 7SEG DP	PULL-DOWN
11	$R2_3$	I/O	H-Z	ID	O	DB5 : 7SEG ID	PULL-DOWN
12	RA_0	I	I	$\overline{MODR}$	I	MODE RETURN	PULL-UP
13	RA_1	I	I	$\overline{CFSR}$	I	CLEARK, FEED, SWITCH RETURN	PULL-UP
14	$R3_0$	I/O	H-Z	KEX0	O	KEY EXCHANGE0	
15	$R3_1$	I/O	H-Z	KEX1	O	KEY EXCHANGE1	
16	$R3_2$	I/O	H-Z	NU	O	GND	
17	$R3_3$	I/O	H-Z	NU	O	GND	
18	$R5_0$	I/O	I	ST0	O	KEY SCAN ST0	
19	$R5_1$	I/O	I	ST1	O	KEY SCAN ST1	
20	$R5_2$	I/O	I	ST2	O	KEY SCAN ST2	
21	$R5_3$	I/O	I	ST3	O	KEY SCAN ST3	
22	$R6_0$/INT0	I/O	I	$\overline{POFF}$	I	P-OFF	
23	$R6_1$/INT1	I/O	I	$\overline{STOP}$	I	STOP	PULL-UP
24	$R6_2$/INT2	I/O	I	$\overline{DDIG}$	O	+5V	
25	$R6_3$/INT3	I/O	I	$\overline{DCS}$	O	DOT DISPLAY CONT./CS	
26	Vcc			VCC		+5V	
27	$R4_0$/SCK	I/O	I	$\overline{SCK}$	I	SCK	
28	$R4_1$/SI	I/O	I	HTS	I	HTS	
29	$R4_2$/S0	I/O	I	STH	O	STH	
30	$R4_3$/PWM	I/O	I	SDISP	I	+5V	
31	$R7_0$/BUZZ	I/O	I	BUZZ	O	BUZZER	
32	$R7_1$/SCK2	I/O	I	$\overline{DSCK}$	O	DOT DISP CONT. SCK	
33	$R7_2$/SI2	I/O	I	$\overline{SRES}$	O	SYSTEM RESET	PULL-DOWN

Pin No.	Port	I/O	RESET State	Signal name	I/O	Notes	PULL–UP –DOWN
34	$R7_3$/S02	I/O	O	DS0	O	DOT DISP CONT. SO	
35	$R8_0$	I/O	O	$\overline{SHEN}$	O	$\overline{SHEN}$	
36	$R8_1$	I/O	O	$\overline{KRQ}$	O	KEY REQUEST	
37	$R9_0$	I	I	$\overline{KR0}$	I	KEY RETURN 0	
38	$R9_1$	I	I	$\overline{KR1}$	I	KEY RETURN 1	
39	$R9_2$	I	I	$\overline{KR2}$	I	KEY RETURN 2	
40	$R9_3$	I	I	$\overline{KR3}$	I	KEY RETURN 3	
41	RESET	I	I	CKDCR	I	CKDC IV RESET	
42	OSC2					4.19 MHz X'tal	
43	OSC1						
44	GND					GND	
45	CL1					32.768 KHz OSC	
46	CL2						
47	TEST	I	I	VCKDC		5V	
48	D0	I/O	H-Z	G1	O	7 SEG DIG 1	PULL-DOWN
49	D1	I/O	H-Z	G2	O	7 SEG DIG 2	PULL-DOWN
50	D2	I/O	H-Z	G3	O	7 SEG DIG 3	PULL-DOWN
51	D3	I/O	H-Z	G4	I	7 SEG DIG 4	PULL-DOWN
52	D4	I/O	H-Z	G5	O	7 SEG DIG 5	PULL-DOWN
53	D5	I/O	H-Z	G6	O	7 SEG DIG 6	PULL-DOWN
54	D6	I/O	H-Z	G7	O	7 SEG DIG 7	PULL-DOWN
55	D7	I/O	H-Z	G8	O	7 SEG DIG 8	PULL-DOWN
56	D8	I/O	H-Z	G9	O	7 SEG DIG 9	PULL-DOWN
57	D9	I/O	H-Z	G10	O	7 SEG DIG 10	PULL-DOWN
58	D10	I/O	H-Z	NU	O		PULL-DOWN
59	D11	I/O	H-Z	NU	O		
60	D12	I/O	H-Z	NU	O		
61	D13	I/O	H-Z	NU	O		
62	D14	I/O	H-Z	NU	O		
63	D15	I/O	H-Z	NU	O		
64	$R0_0$	I/O	H-Z	SA	O	DB4 : SEG-A	PULL-DOWN

NOTE 3: Pull-up/down in the table indicates that the lines concerned require external pull-up/down resistance.

3. Clock generator

1) CPU (HD64151010FX)

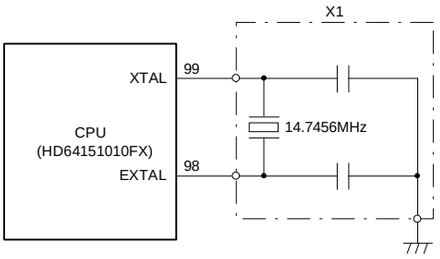

Fig. 3-1

Basic clock is supplied from a 14.7456MHz ceramic oscillator.
The CPU contains an oscillation circuit from which the basic clock is internally driven. If the CPU was not operating properly, the signal does not appear on this line in most cases.

2) HD404728A91FS CKDC6 oscillation circuit (Display-PWB)

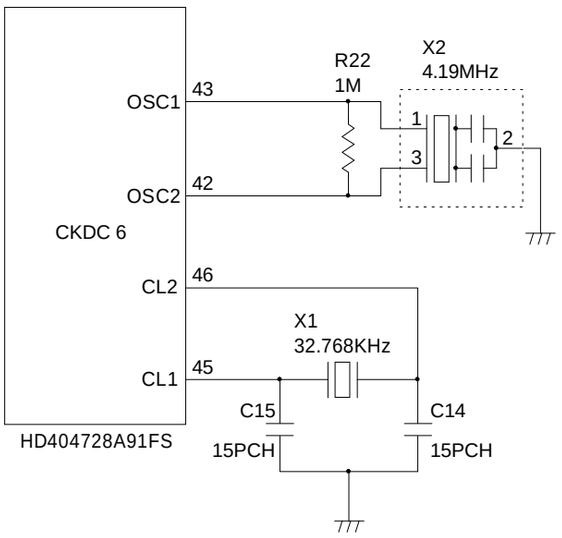

Fig. 3-2

Two oscillators are connected to the CKDC6.
The main clock X2 generates 4.19MHz which is used during power on.
When power is turned off, the CKDC6 goes into the standby mode and the main clock stops.
The sub-clock X1 generates 32.768KHz which is primarily used to update the internal RTC (real time clock). During the standby mode, it keeps oscillating to update the clock and monitoring the power recovery.

4. Reset (POFF) circuit

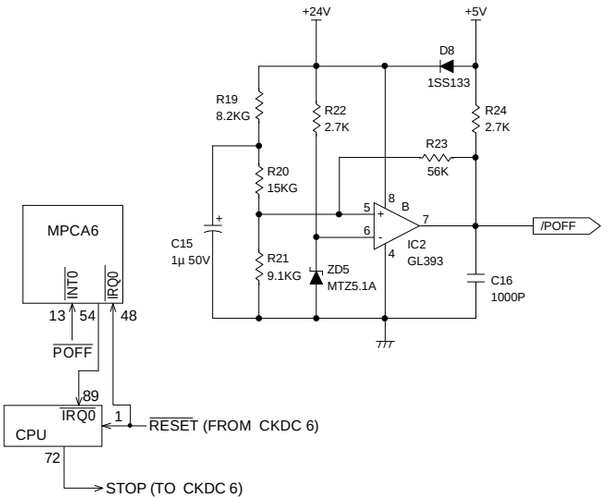

Fig. 4-1

In order to prevent memory loss at a time of power off and power supply failure of the ECR, the power supply condition is monitored at all times. When a power failure is met, the CPU suspends the execution of the current program and immediately executes the power-off program to save the data in the CPU registers in the external S-RAM with the signal $\overline{\text{STOP}}$ forced low to prepare for the power-off situation. The signal $\overline{\text{STOP}}$ is supplied to the CKDC6 as signal $\overline{\text{RESET}}$ to reset the devices.
This circuit monitors +24V supply voltage.
The voltage at the (–) pin of the comparator GL393 is always maintained to 5.1V by means of the zener diode ZD5, while +24V supply voltage is divided through the resistors R19, R20, and R21, and is applied to the (+) pin. When normal +24V is in supply, 6.8V is supplied to the (+) pin, therefore, signal $\overline{\text{POFF}}$ is at a high level. When +24V supply voltage decreases due to a power off or any other reason, the voltage at the (+) pin also decreases. When +24V supply voltage drops, the voltage at the (+) pin drops below +5.1V, which causes $\overline{\text{POFF}}$ to go low, thus predicting the power-off situation.

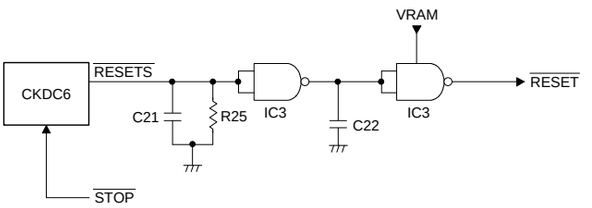

The $\overline{\text{STOP}}$ signal from the CPU is converted into the $\overline{\text{RESETS}}$ signal by the CKDC6.
The $\overline{\text{RESETS}}$ signal from the CKDC6 is converted into the $\overline{\text{RESET}}$ signal at the gate backed-up by the VRAM power, performing the system reset.

5. Memory control

1) Memory map

1 **All range memory map**

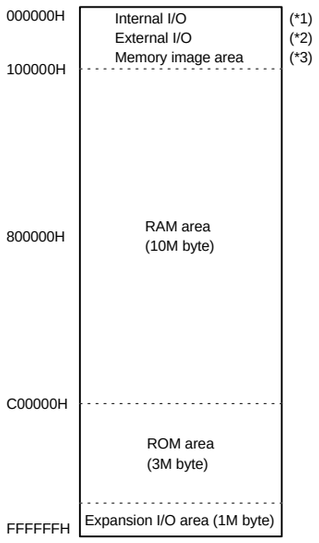

Fig. 5-1

(* 1) “Internal I/O” means the registers in the H8/510.

(* 2) “External I/O” means the base system I/O area to be addressed in page 0.

(* 3) "Memory image area" means the lower 32KB of ROM area which is projected to 000000H ~ 007FFFH for allowing reset start and other vector addressing, or the lower 32KB of ROM area which is projected to 008000H ~ 00FE7FH for allowing 0 page addressing of work RAM area.

(* 4) “Expansion I/O” means expansion I/O device area which isaddressed to area other than page 0.

2 **0 page memory map**

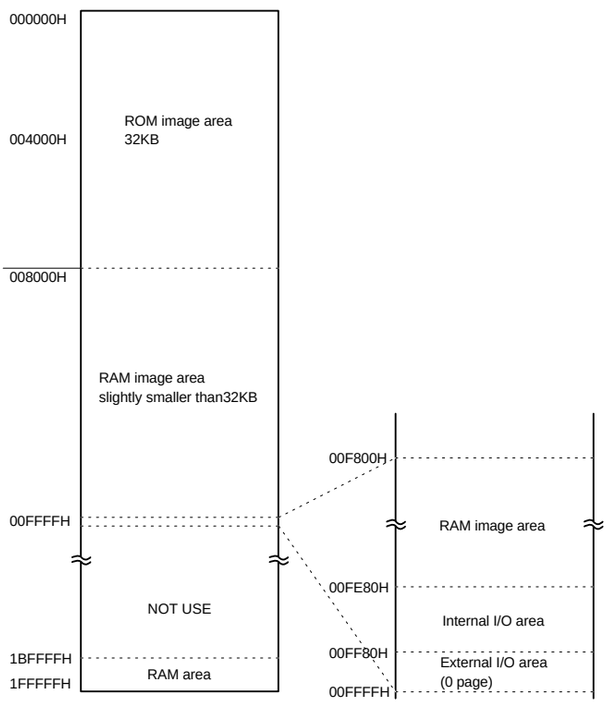

Fig. 5-2

- ROM image area: Image is formed in ROM area address C00000H C07FFFH. This area is identical to IPL ROM area which will beseparately developed.
- RAM image area: Image is formed in RAM area address 1D8000H1DFE7FH. (* Note)

  * Note: Image can be formed in lower 32KB of RAS2.

3 **ROM area memory map**

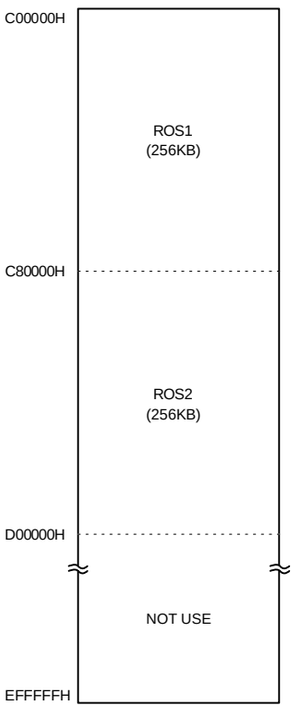

Fig. 5-3

These two decode signals decode 512KB space respectively and canbe used with max. 4MB ROM.

* Note: The lower 32KB of ROS1 signal is formed as OR of image area in 0page.

4 **RAM area memory map**

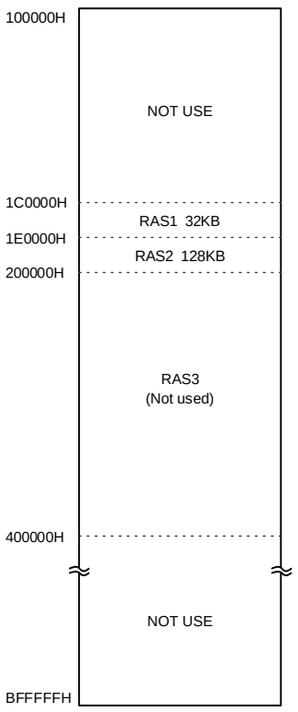

Fig. 5-4

In the three RAM chip select, the following address is decoded.

CS signal	Address
• RAS1	1C0000H~1DFFFFH (008000H~00FE7FH) * Note
• RAS2	1E0000H~1FFFFFH (008000H~00FE7FH) * Note
• RAS3	200000H~3FFFFFH

* Base signal is for 2M.

* Note: RAS1 signal is formed as OR in the image area of 0 page.j (Lower 32KB).
RAS2 signal is formed as OR in the image area of 0 page. (lower32KB).

5 **I/O area memory map**

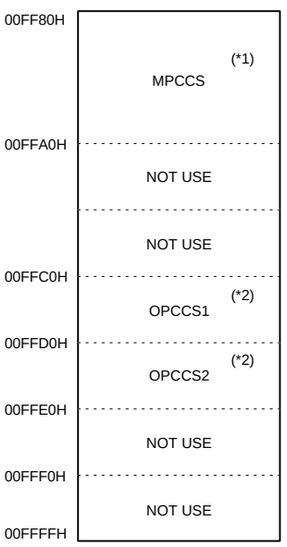

Fig. 5-5

* Note 1: MPCCS signal is the base signal for MPCA6 internal registerdecoding, and does not exist as an internal signal.

* Note 2: OPCCS1 and OPCCS2 signals are decoded in the OPC (optionperipheral controller) using the base signal OPTCS for optiondecoding. They does not exist as external signals.

2) Block diagram

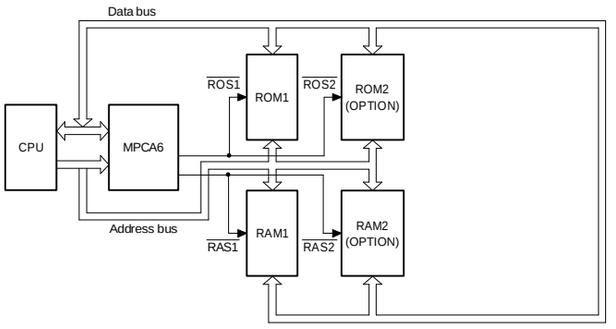

Fig. 5-6

1 **ROM control**

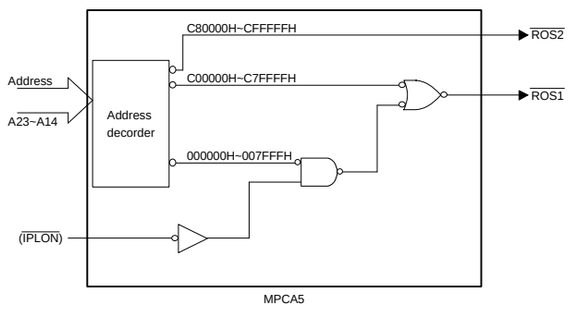

Fig. 5-7

IPLON: IPL board detection signal incorporated in the option slot. Note used in the ER-A460/A470. (Not used)

Access is performed with two ROM chip select signals $\overline{\text{ROS1}}$ and $\overline{\text{ROS2}}$, which decode 512KB address area respectively to accessmax. 4MB ROM.

2 **RAM control**

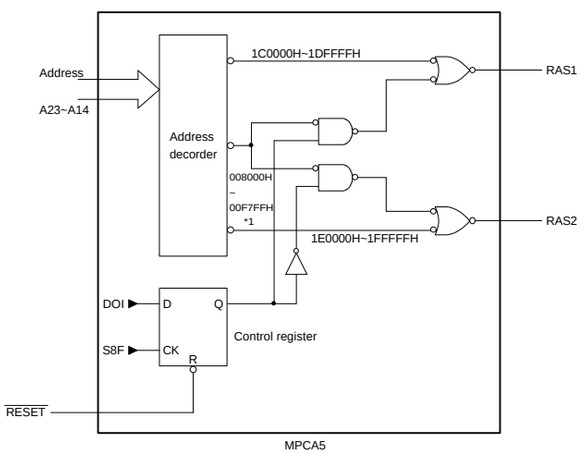

Fig. 5-8

Access is performed with two RAM chip select signals RAS1, RAS2 and RAS3. The control register in MPCA6 allows selection of pageimage memory area. (RAS1 is selected for initializing.)

* : For 0 page image area, selection between RAS1 and RAS2 can bemade with the control register. The 0 page control registerperforms initializing at the timing of no stack processimmediately after resetting.

6. SSP circuit

1) Block diagram

This is the circuit employed to do the Special Service Preset(SSP).

(Block diagram)

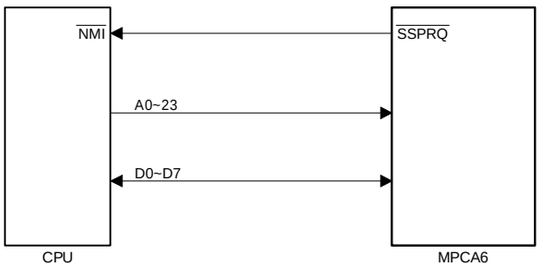

Fig. 6-1

(MPCA6 block diagram)

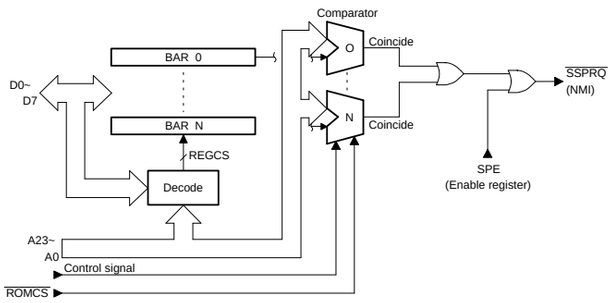

Fig. 6-2

As the address detection system, the brake address register comparison system is employed though the mapping system was employed in the conventional monitor RAM. The address registerlocated in MPCA is always compared with the system address bus to monitor and generate NMI signal at a synchronized timing and togo to NMI exception process.

In the exception process routine service routine, the entry address is checked to go to SSP sub routine.

Entry to the break address register (BAR) is performed through address FFFF00H or later decoded in MPCA6.

2) SSP register

The break address register (BAR) is accessed through direct address of FFFF00H~FFFFFFH. Entry number is 32 entry.

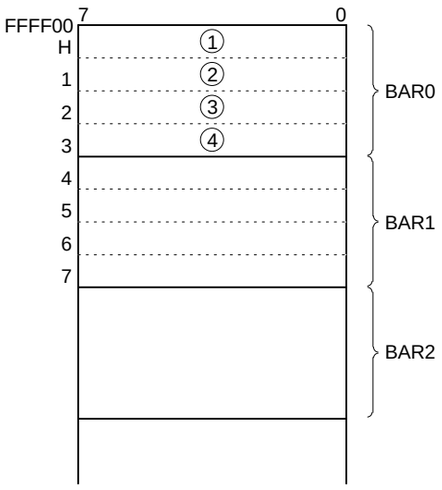

Fig. 6-3

Each BAR is composed of 4 byte address. Bit composition is as follows:

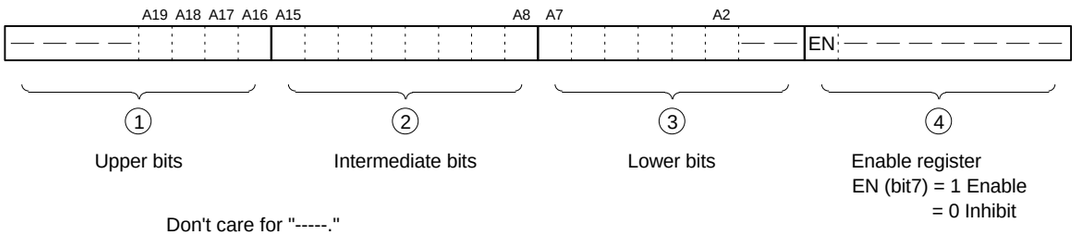

< BAR composition >

Fig. 6-4

4 is the enable register. The entry registers of the break address are assigned to 1 , 2 , and 3 . Each bit of address corresponds to each bit position, writing to 1 , 2 , and 3 is performed without shifting. The corresponding area is 1MB space of ROS1 and ROS2.

3) SSP register access method

Access to SSP break address register is performed through the temporary register as shown below:

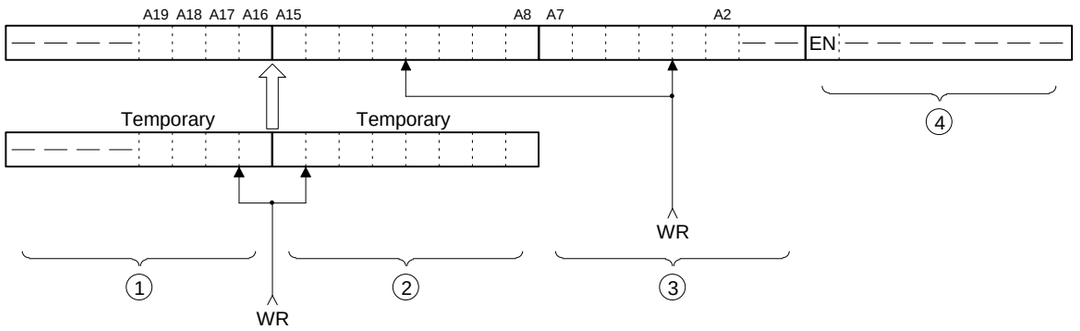

Fig. 6-5

Enable flags can be accessed individually.
Though enable register 4 can be accessed individually, writing to brake address registers 1 and 2 is performed at the same time as writing to brake address register 3 through the temporary register.
Therefore, set 1 and 2 to temporary, then write into 3 at last.
Since the temporary register is commonly used by BAR sets, the-following register setting is performed after completion ofsetting of each break address register.

3 **SSP control method**

Access to the enable register and the brake address register is only possible when writing to them from the CPU.

bit 7	6	5	4	3	2	1	0	
0	0	0	CMP4	CMP3	CMP2	CMP1	CMP0	(FFFFFFH)

Information on which brake register the SSP brake is detected in is read as binary data by reading address FFFFFFH (*1).
Used in an expanded register.
Normally is a reserve bit. Whenreading, fixed to 0.

If there are 32 break registers, binary expression is made with the above 5 bits, and 0th is “00000_B” and 31st is “11111_B.”

When detected simultaneously by two or more break registers, onewith the smaller BAR number is read as binary data.

The brake signals (NMI) and the above detection data (CMP0~4) areheld until the above detection data are read. So read should bem-ade in the NMI sub routine. (Clear by FFFFFFH read.)

* 1: FFFFFFH is not fulldecoded. (FFFF00H~FFFFFFH). There-fore,unnecessary read access in parentheses should not be performed.

7. PRINTER control circuit

1)Block diagram

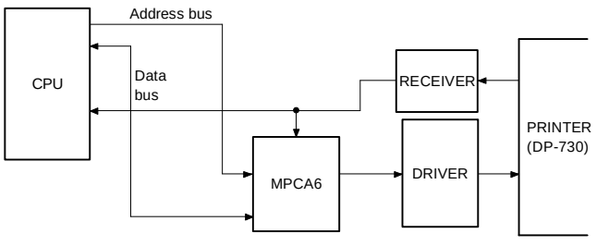

Fig. 7-1

2) General description of the printer controller

The DP-730 is used as the R/J printer. The printer mechanical timing control is made by the CPU through MPCA6.

3) Printer motor drive circuit

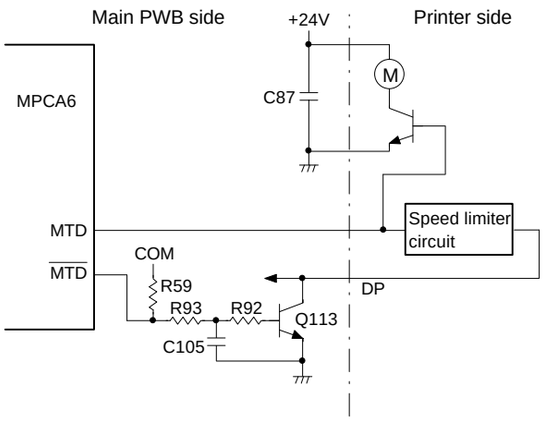

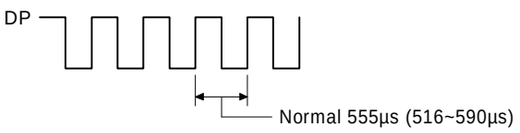

When the MTD is high, the motor rotates.
When the MTD is low, the motor stops.

<Motor lock protection>
When an abnormal load is applied to the mechanism, the DP (Dot Pulse) frequency is checked to prevent against the motor burn-out, the timing belt shift, and gear damage. If the following condition is made, the CPU stops the motor rotation.

1 When starting the motor: When the cycle from starting to the 100th pulse of DP is 16ms. (The one pulse cycle of DP is normally 555us.)

2 During constant rotation of the motor: When one pulse of DP is 1100us or more.

4) Printer sensor circuit

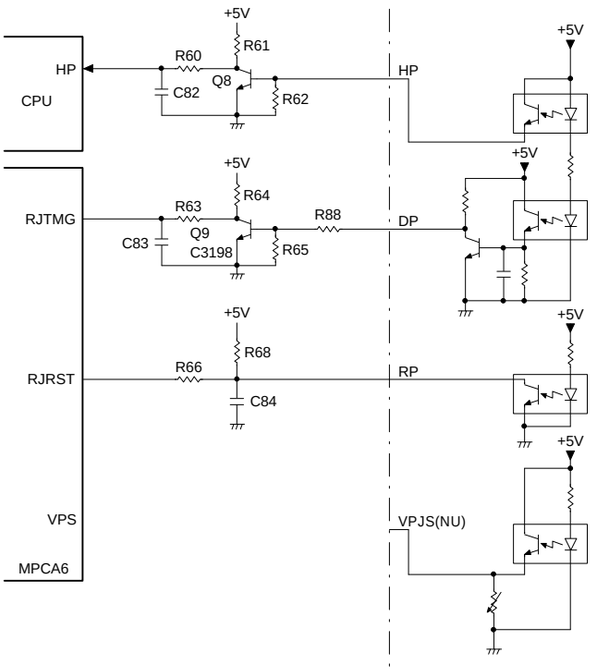

The printer supplies the RP (Reset Pulse) signal, the HP (Home Position) signal, and the DP (Dot Pulse) signal) to control printing timing and conduction timing of solenoids. It also supplies the VPJ signal to detect the presence of validation paper. These sensor are photo interrupters.

1 RP (RJRST) signal
This signal is outputted once for every reciprocating motion of the print head. It indicates the reference position of the HP signal.
The rear edge of RP (OFF -- ON) is used as the signal.

2 HP signal
The pulse signal is outputted from the slit in the disk installed to the DC motor shaft. It is used as the reference signal for starting counting of the DP signal. It is generated once for twenty DP signals. The rear edge of the HP signal (ON -- OFF) immediately after generation of the RP signal is used as the signal.

3 DP (RJTMG) signal
The pulse signal is outputted from the slit in the disk installed to the DC motor shaft. It is used as the control signal for the print solenoid and the paper feed solenoid.
The front edge of the output signal (ON -- OFF) is used as the signal.

4 VPJS (VPJ) signal
The presence of a validation card is detected by interruption of the photo interrupter LED light by the validation card.

Relation ship among RP/HP/DP

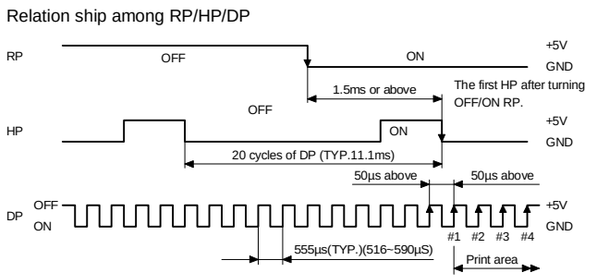

* The waveforms are those indicated with arrow in Fig.3-3.

5) Dot solenoid drive circuit

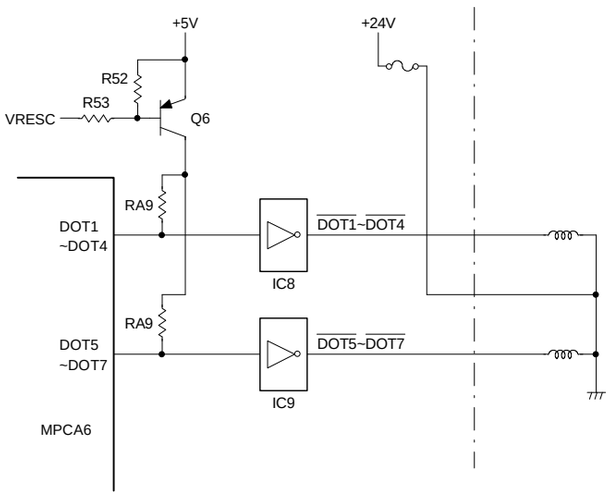

The DOT1 ~ DOT4 (the dot solenoid drive signals from the MPCA6) are pulled up by the VRESE and converted into LOW by the driver IC. A +24V voltage is applied to the solenoid. This operates the dot wire.

6) Paper feed circuit

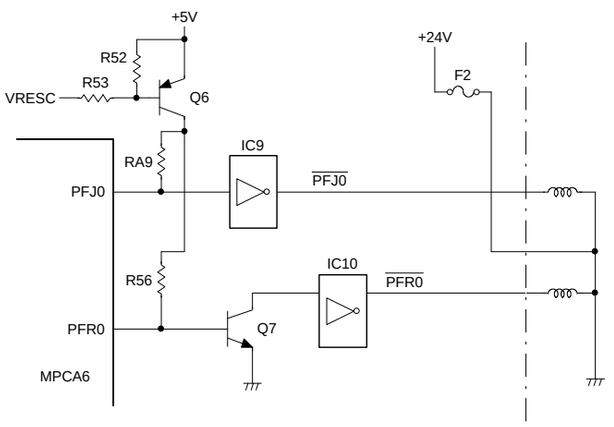

The PFJ0 (the journal paper fed signal from the MPCA6) and the PFR0 (the receipt paper feed signal) are pulled up by the VRESE and converted into LOW level. A +24V voltage is applied to the solenoid. This operates the paper feed solenoid.

7) Stamp circuit

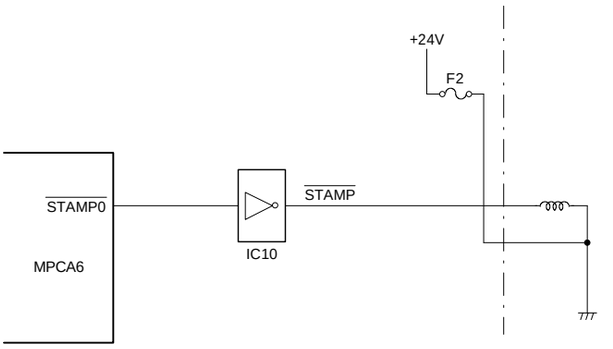

The STAMP0 (the stamp solenoid drive signal from the MPCA6) flows through the driver IC to the solenoid. A +24V voltage is applied to the solenoid. This operates the stamp.

8) Caution

CAUTION

If fuse F2 should be blown, the dot head solenoid may be shorted. Be sure to check the head impedance and driver breakdown.

When fuse F2 is blown:

1 Remove F2, and perform the service resetting. The set the mode switch to a position other than SRV and SRV' and turn off the power.

2 Install fuse F2 (1.5A) and turn on the power.
If the fuse blows with the above operation, driver STA401A may be shorted.

3 Turn off the power.

4 Disconnect the printer cable from the printer. Measure impedance between the printer body connector pin 5 and the following pins: 1, 3, 9, 11, 13, 21, 25
The impdenace must be 10.5Ω ± 10%.
If impedance is outside the above range, the dot solenoid is bad. Replace the dot head unit.

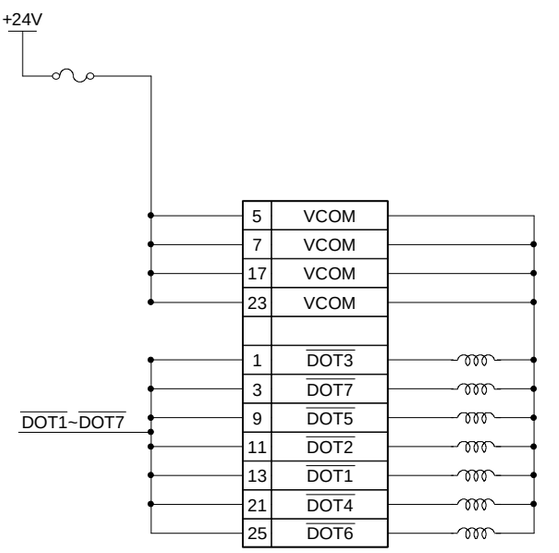

8. Drawer drive circuit

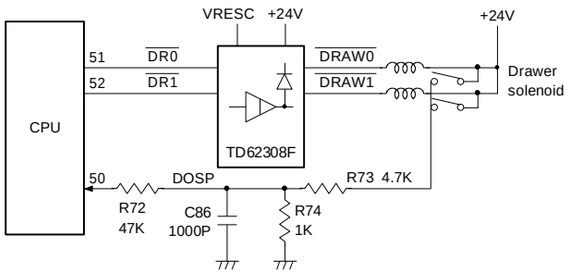

Fig. 8-1

The drawer is directly supported by the CPU. No action starts when the power supply is not steady as the output stage of the driver is pulled VP by VRESC signal.
Drawer open and close is sensed with the microswitch provided in the drawer whose signal is level converted with R74 and R73 and directly read by the CPU.

9. Key, display, timer, buzzer controls

The keys, switches, displays, timer/calendar, and buzzer are controlled by the CKDC-4 on the display PWB.

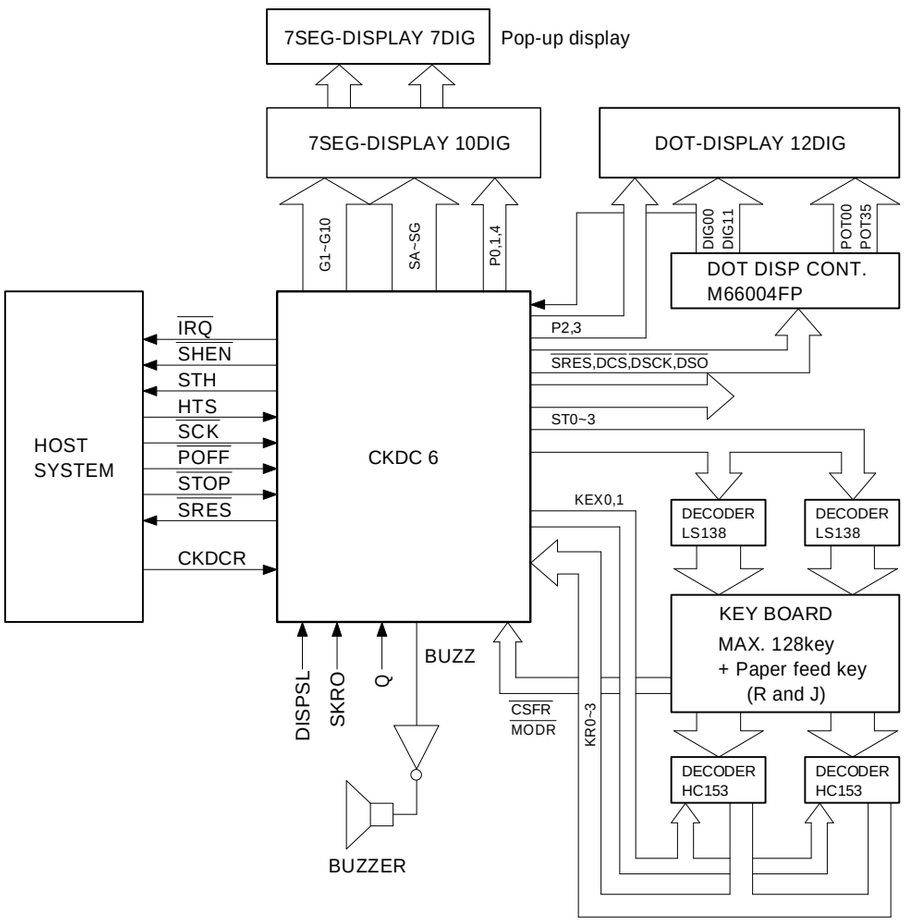

Block diagram
Fig. 9-1

1) Power on/off sequence

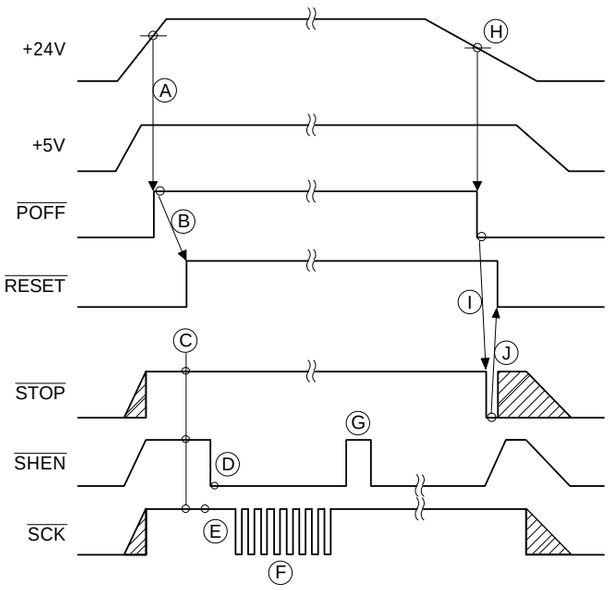

Fig. 9-2

Hatched area indicates logic unstable.

<At power on>

When +24V power rises, the signal POFF is forced high (A), by which time the +5V supply becomes stable. The CKDC6 monitors the state of POFF while updating the timer/calendar in the low power standby mode, and when the high state of POFF is detected, the system reset signal (RESET) is set high (B), by which time the output lines STOP and SCK of the CPU and MPCA6 have been initialized to high, respectively (C). Thereafter, the CKDC6 sets SHEN active (low) (D) to notify the CPU of the command/data communication ready state.
One byte data/command can be transferred with eight SCK pulses (F). When one byte has been transferred with eight SCK pulses, the CKDC6 sets SHEN high to initiate internal processing. After completion of the internal processing, when the next byte transfer becomes ready, the CKDC6 sets SHEN back to a low state to wait for the next byte transfer (G).
Thereafter, the SHEN and SCK timing described above is repeated to carry on the communication.

<At power off>

When +24V power drops, POFF goes low (H).
A low on the POFF line causes a low level interrupt request which is sent the IRQ0 pin of the CPU. Within a maximum of 10msec of the low level IRQ0 input, the CPU performs software processing necessary for power-off, after which the STOP output is set low (I).
When STOP goes low, the CKDC6 sets RESET low to reset the whole system (J). And, the +5V supply is held at 4.75V or higher voltage, after which the voltage drops to a level that the logic circuit does not operate.

2) Key and switch scanning

Strobes ST0 ~ ST3 are decoded on the keyboard by two 74LS138 3-to-8 decoders to generate 16 strobe signals of S15 ~ S0.
The key matrix consists of 16 strobe lines and 16 returns lines of KR0A, KR1A, KR2A, KR3A, KR0B, KR1B, KR2B, and KR3B.
To minimize interfacing lines between the CKDC6 and the keyboard unit, two multiplexers (74HC153) are used to multiplex signals by the timing controlled with the signals KEX0 and KEX1 which are sent to the CKDC6 on the return lines of KR0 ~ KR3.

Timing ST

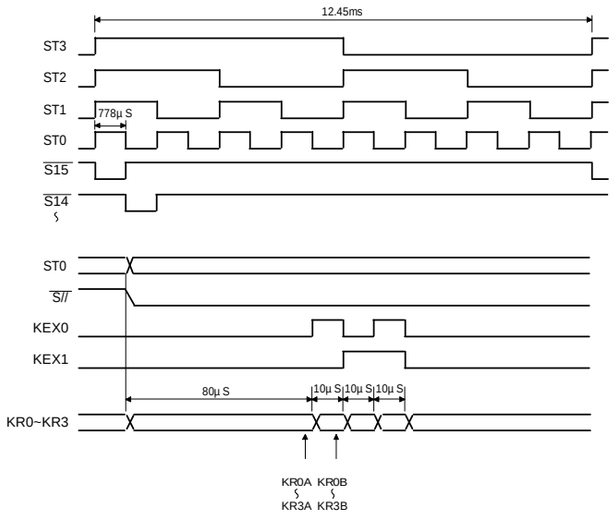

Fig. 9-3

The mode switch in provided with a special return line MODR, apart from the above return lines.
In the same manner, the clerk, paper feed key (J/R), and receipt on/off switches use CFSR as the return line.

3) DISPLAY CONTROL

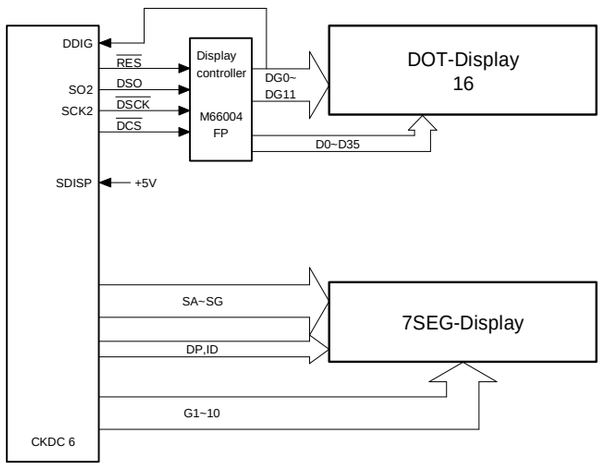

Fig. 9-4

CKDC6 directly drives the 7-segment display unit and the dot display is driven via M66004FP.

<7-segment display>

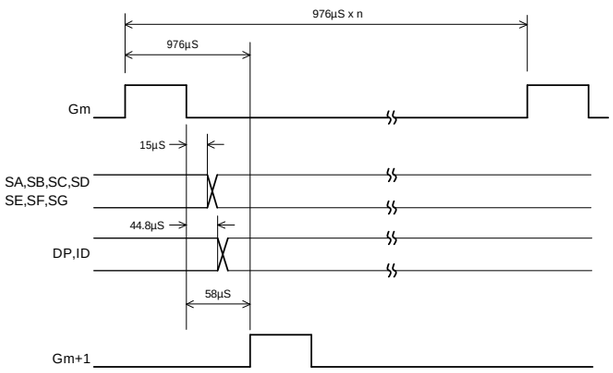

Fig. 9-5

<Dot display>

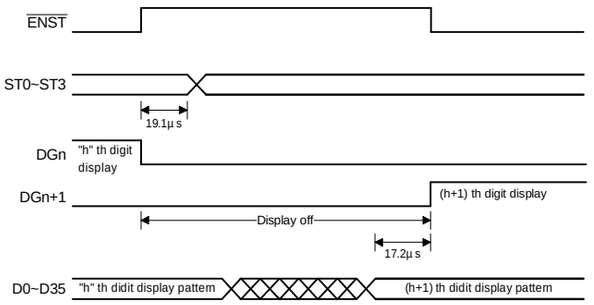

Fig. 9-6

IMPORTANT:

The CKDC6 lines are not high voltage resistive ports. Damage may occur to the CKDC6 if lines are shorted carelessly when using oscilloscope probes.

- Dot matrix tube
  A 4-bit binary output signals (ST0-ST3) from CDKC6 are converted into the digit drive signal (DG0-DG11) in the M66004FP.

<Dot display control>

The CKDC6 controls the character segment (5 x 7) and the indicator of the dot display by using the controller (M66004FP) for dot display control.

1 M66004FP/Dot display control signal

Signal name	Contents	Pin/Remark
DSO	Serial data output signal for M66004FP	C-MOS pin
$\overline{\text{DSCK}}$	Serial shift clock output signal for M66004FP	C-MOS pin. Requires to be pulled up
$\overline{\text{DCS}}$	Chip select output signal for M66004FP	C-MOS pin

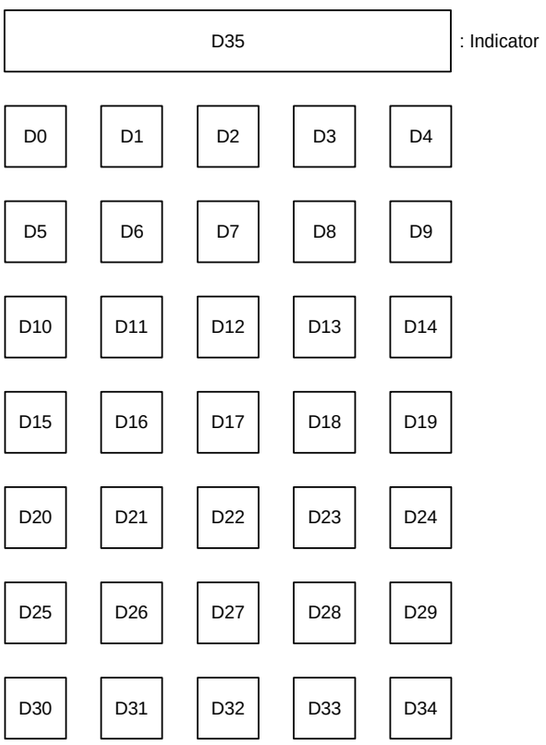

10. Power supply circuit

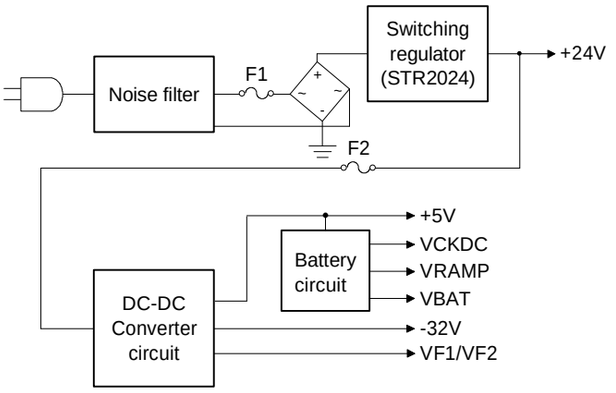

Fig. 10-1

+24V:	Printer, solenoid power
+5V:	VCC (Logic power)
VBAT:	Battery charge
–32V:	Display tube power
VF1, VF2:	Display tube power (AC)
VRAM:	Battery back-uped power
VCKDC:	CKDC-4 Back-up power

11. Switching regulator circuit

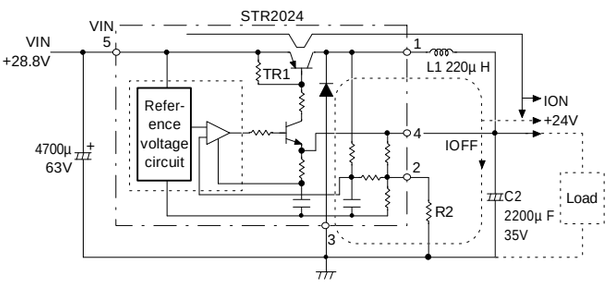

Fig. 11-1

By switching VIN (+28.8V) by the transistor TR1 within the STR2024, DC+24V supply is obtained through the LC network. Stable +24V is obtained by controlling on/off duty of TR1.

ION: Current when TR1 is on.
IOFF: Current when TR1 is off.

12. I/R communication circuit

- In the ER-A460/A470, infra-red data transmission of the optical communication system is performed.

System	IRDA	ASK	REMOTE KEYBOARD
Carrier wave	950 nm	900 ~ 1050 nm	900 ~ 950 nm
Sub-carrier wave	(16 times of baud rate clock)	500 kHz±10%	33 ~ 40 kHz
Modulation system	"0": HIGH level "1": LOW level Only around the center of the bit cycle in HIGH level, 3/16 of the bit cycle is set HIGH, and the rest is set LOW.	Pulse modulation: The pulse array of data code is modulated by the AM system. Primary modulation: The sub-carrier waveform is amplitude-modulated with this pulse array. Secondary modulation: With the sub-carrier waveform which was modulated in the primary modulation, infra-red rays are amplitude-modulated.	Pulse modulation: The pulse array is modulated by data codes in the PPM system. Primary modulation: The sub-carrier waveform is amplitude-modulated with this pulse array. Secondary modulation: With the sub-carrier waveform which was modulated in the primary modulation, infra-red rays are amplitude-modulated.
Modulated waveform	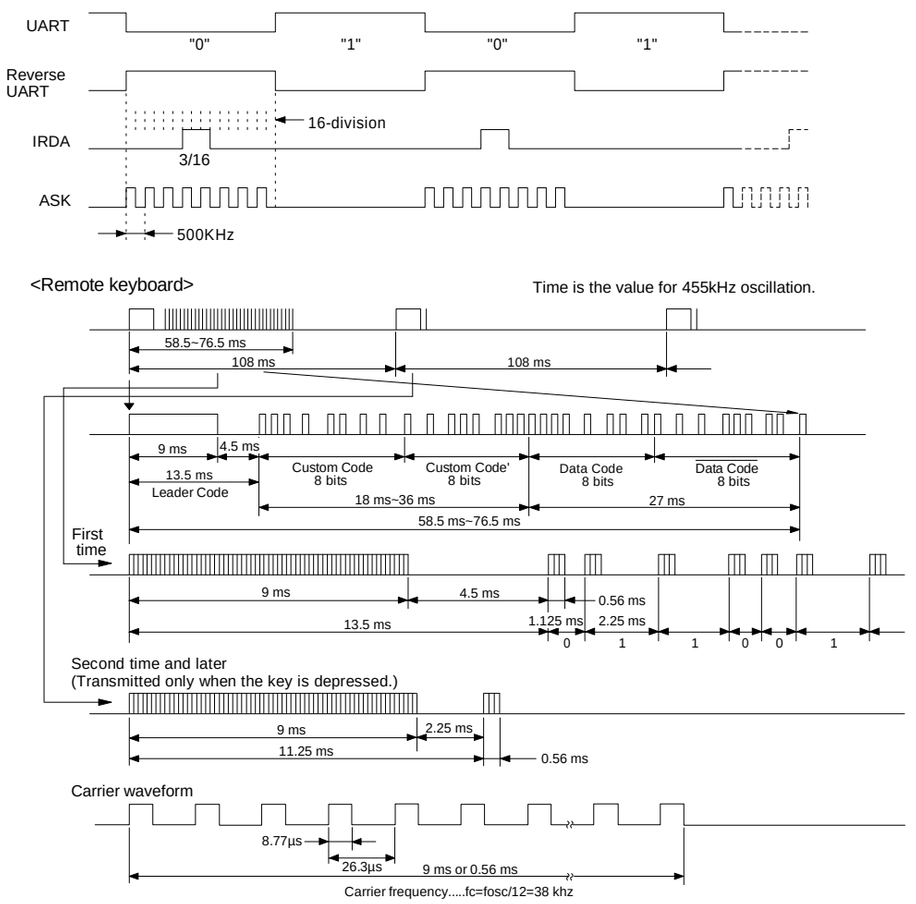		
Baud rate	2.4 ~ 115.2 kbps	9.6 ~ 57.6 kbps (ZR-5000: 9600 bps)	—
Serial communication system	Start-stop synchronization system Data length: 8bit Parity: None Stop bit: 1	Start-stop synchronization system Data length: 8bit Parity: ODD Stop bit: 1	—
Transmission distance	About 0.75m: ECR to ECR Min. 0.65m	About 0.75m: ECR to ECR Min. 0.65m	About 1m

Reception circuit

The infra-red signals which was transmitted from the transmission unit through the air is received by the photo diode, and sent through the two-system circuit to the MPCA6, where they are modulated and inputted to the CPU.

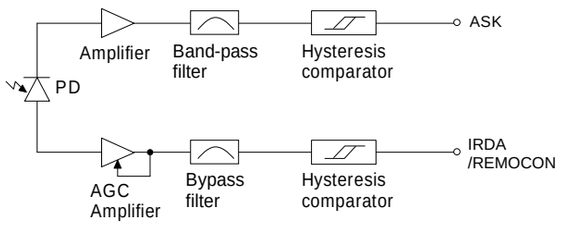

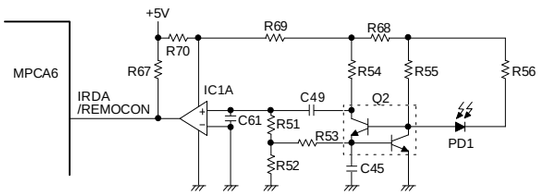

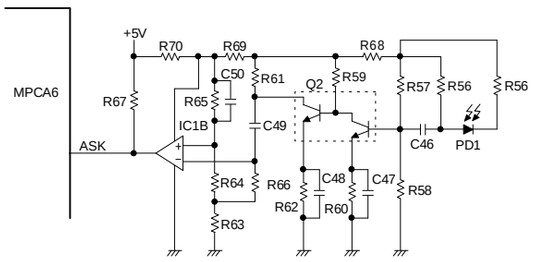

Transmission circuit

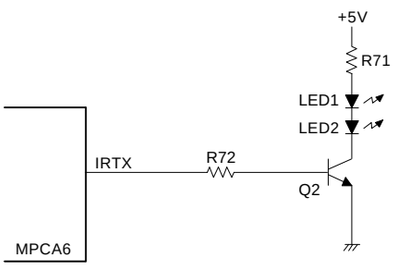

With the IRTX signal from the MPCA6, Q2 is turned on/off to light LED1, 2. To strengthen the light intensity, two LED's are used.

CHAPTER 5. TEST FUNCTION

1. General

1) This diagnostic program has been developed for diagnosing machine functions in the field. The program is contained within the ER-A460/A470.
   The diagnostic program is stored in the external ROM which will be executed by the CPU (H8/510) which requires the following diagnostic operations:
   a) Proper power supply voltages are mandatory for logic circuits (+5V, VRAM, VCKDC, POFF, +24V).
   b) CPU input/output pins, CPU internal logic, CKDC6, MPCA6, address decoder, address bus, data bus, and common ROM/RAM must be working properly.

2. Operational procedure

To start the diagnostic program, you must enter the following command.
3-digit test item number → [TL] key in the SRV mode.
The key assignment must be properly set and the ROM and RAM must be operating properly to go into this mode. This is necessary because the control jumps to the program area in the SRV mode. A master reset must be performed before operating the ECR for the first time. After any option is installed, a program reset is required. When the master reset or program reset is performed, be sure to check the printout on the journal paper.

Master reset:	Turn power on in the SRV' mode and change it to the SRV mode with the [JF] key pressed.
Journal print:	MASTER RESET ***
Program reset:	Turn power on in the SRV' mode and change it to the SRV mode.
Journal print:	PRG. RESET ***

3. Test command list

With the SRV mode and the following command entry, the test starts.

Code	Description
100	Display test-1
101	Key and clerk switch position code display
102	R/J printer test
104	Keyboard test
105	Mode switch test
106	Validation sensor and near end sensor test[*1]
108	Calendar oscillator test
109	SSP test
110	Drawer-1 open and sensor test
111	Drawer-2 open and sensor test
116	Display test-2
117	I/R interface test reception side
118	I/F interface test transmission side
120	Standard RAM test
130	Standard ROM test
150	R/J printer dot pulse width adjustment
200	Option RAM chip test
400	Option ROM chip test

[*1] Validation sensor is not used.

[1] Display test-1

1 Key operation
   100 → [TL]

2 Functional description
   The following is displayed:

   Front display

   DOT DISPLAY: 1 2 3 4 5 6 7 8 9 0 A B
   7-SEGMENT DISPLAY: 1 2 3 4 5 6 7 8 9 0

   Operator display

   4 5 6 7 8 9 0

3 Check the following items:
   a) Check for proper activation of display elements.
   b) Check for blur, uneven illumination, and partial omission.

4 Test termination
   Press any key. The test terminates with the test and message printed.

   100
   Test termination print

[2] Key, clerk, and switch position code display

1 Key operation
   101 → [TL]

DOT DISPLAY: C L K / K E Y S R V
7-SEGMENT DISPLAY: ○ ○ ○ — — ○ ○ ○ — —
Person-in-charge code
Key position code

2 Functional description
   Key, clerk, and receipt switch codes are displayed.

3 Check the following items:
   Change key and switch positions for proper display activation.

Clerk code:	1 hole clerk key
	000 (off state)
	001 (Clerk 1)
	002 (Clerk 2)
	*
	255 (Clerk 255)
Key code:	--- (simultaneous two key) depression, invalid entry)

KEY POSITION CODE
ER-A460 (Normal key) 14 x 6

↑R	↑J	016	022	028	034	040	046	052	058	064	070	076	082
005	010	015	021	027	033	039	045	051	057	063	069	075	081
004	009	014	020	026	032	038	044	050	056	062	068	074	080
003	008	013	019	025	031	037	043	049	055	061	067	073	079
002	007	012	018	024	030	036	042	048	054	060	066	072	078
001	006	011	017	023	029	035	041	047	053	059	065	071	077

ER-A470 (Flat key) 15 x 8

↑R	↑J	022	030	038	046	054	062	070	078	086	094	102	110	118
007	014	021	029	037	045	053	061	069	077	085	093	101	109	117
006	013	020	028	036	044	052	060	068	076	084	092	100	108	116
005	012	019	027	035	043	051	059	067	075	083	091	099	107	115
004	011	018	026	034	042	050	058	066	074	082	090	098	106	114
003	010	017	025	033	041	049	057	065	073	081	089	097	105	113
002	009	016	024	032	040	048	056	064	072	080	088	096	104	112
001	008	015	023	031	039	047	055	063	071	079	087	095	103	111

4 Test termination
Change the MODE switch position other than SRV position to terminate the test. The test termination message is printed.

Test termination print	101

[3] R/J printer test

1 Key operation
102 → [TL]

2 Content

DOT DISPLAY: P R I N T S R V
7-SEGMENT DISPLAY: 1 2 3 4 5 6 7 8 9 0

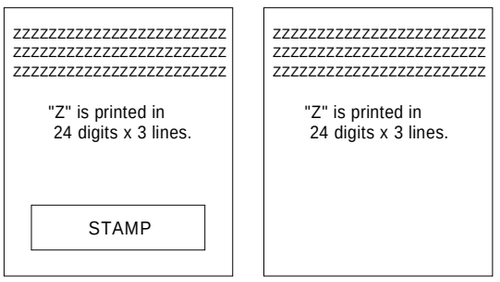

RECEIPT JOURNAL

3 Check content

1. Check that the slanted lines of "Z" characters are clearly printed.
2. Check that the characters are printed at a uniform density.
3. Check the paper feed operation and the logo print.

4 Termination
This check is terminated automatically.
The termination print is not performed.

[4] Keyboard test

1 Key operation
XXXX104 → [TL]
XXXX: Sumcheck data

Standard key layout sumcheck data	
ER-A460	3681
ER-A470	7449

2 Details of test
Keyboard check is performed with the sum check data of key code.
For sum check data, data are inputted to the upper four digits before the diagnostics code. The data are compared with the added data which are added until the final key (TL) is pressed. If the data agree with the added data, the end print is made. If not, the error print is made.

The sum check data is obtained by totalizing all key hardware codes except for the TL key and converting the total into a decimal figure.

ER-A460 KEY HARDWARE CODE

1. STANDARD KEY LAYOUT
SUM CHECK DATA = 6F+65+63+00+02+ ····· = E61 = 3681

↑R	↑J	6F		65		63		00	02	08	0C	0E
7E	7F	77		74	73	71		10	12	16	18	0D
5E	7D	5F		55	54	53		50	52	56	59	2B
4E	5D	4F		45	44	43		42	46	48	39	0B
4D	2F			25	24	23		26	28	09	1B	
3D	37			7B	78			3A	2A	2C	TL	

2. ALL KEY LAYOUT

↑R	↑J	6F	67	65	64	63	61	21	00	02	08	0C	0E
7E	7F	77	75	74	73	71	70	11	10	12	16	18	0D
5E	7D	5F	57	55	54	53	51	31	50	52	56	59	2B
4E	5D	4F	47	45	44	43	41	40	42	46	48	39	0B
4D	2D	2F	27	25	24	23	20	22	26	28	09	0A	1B
3D	3F	37	3E	1E	7B	78	79	1A	3A	2A	2C	1C	1D

ER-A470 KEY HARDWARE CODE

1. SUM CHECK DATA = 0F+06+05+04+00+····· = 1D0E = 7449

↑R	↑J	0F	06	05	04	00	01	07	0B	0A	09	08	0C	0D
4F	46	45	44	40	41	42	43	47	4B	4A	49	48	4C	4D
3F	36	35	34	30	31	32	33	37	3B	3A	39	38	3C	3D
2F	26	25	24	20	21	22	23	27	2B	2A	29	28	2C	2D
1F	16	15	14	10	11	12	13	17	1B	1A	19	18	1C	1D
5F	56	55	54	50	51	52	53	57	5B	5A	59	58	5C	5D
6F	66	65	64	60	61	62	63	67	6B	6A	69	68	6C	6D
7F	76	75	74	70	71	TL	73	77	7B	7A	79	78	7C	7A

2. ALL KEY LAYOUT

↑R	↑J	0F	06	05	04	00	01	07	0B	0A	09	08	0C	0D
4F	46	45	44	40	41	42	43	47	4B	4A	49	48	4C	4D
3F	36	35	34	30	31	32	33	37	3B	3A	39	38	3C	3D
2F	26	25	24	20	21	22	23	27	2B	2A	29	28	2C	2D
1F	16	15	14	10	11	12	13	17	1B	1A	19	18	1C	1D
5F	56	55	54	50	51	52	53	57	5B	5A	59	58	5C	5D
6F	66	65	64	60	61	62	63	67	6B	6A	69	68	6C	6D
7F	76	75	74	70	71	72	73	77	7B	7A	79	78	7C	7D

DOT DISPLAY: K E Y T E S T S R V
7-SEGMENT DISPLAY: ○ ○ ○
Key code

3 Check item

A) Check the display in the test and the content of end print.

4 Test end

Normal end	104
Error	E - - - 104

[5] Mode switch test

1 Key operation
105 → TL

2 Details of test

DOT DISPLAY: M O D E S W S R V
7-SEGMENT DISPLAY: X

MODE: SRV_PGM1/2_TEXT_∽_OP X/Z_REG_X1/Z1_X2/Z2___SRV

x:	0	1	2	(E)	3	4	5	7	0

"x" must be read in proper sequence.

3 Check item

A) Check of the display in the test and the content of end print.

4 Test end

Normal end	105
Error	E - - - 105

[6] Printer sensor test

1 Key operation
106 → TL

2 Details of test
Check the state of the paper near end sensor and the validation sensor.

DOT DISPLAY: S E N S O R S R V
7-SEGMENT DISPLAY: x x y y

3 Check item

x, x: Near end, receipt side, journal side
y, y: Validation, receipt side, journal side
C: Paper present
O: Paper empty
"C" is displayed also when there are no sensors.

4 Test end
Press any key to terminate the test. The end print is as follows:
106

[7] Calendar oscillator test

1 Key operation
108 → TL
Functional description
This program is used to test the calendar oscillator function.

DOT DISPLAY: T I M E R S R V
7-SEGMENT DISPLAY: * * — * *

" * * – * * " shows the current time.

2 Check the following items:
i) Testing blinking "–". (500ms ON and OFF)

3 Test termination
Any key depression terminates the test with the termination print.

Test termination print	108

[8] SSP test

1 Key operation
109 → TL

2 Functional description
If an SSP is programmed, its contents are automatically checked and the result is printed.

DOT DISPLAY: S S P T E S T S R V
7-SEGMENT DISPLAY: 1 2 3 4 5 6 7 8 9 0

3 Check the following items:
Check printing of the termination message.

4 Test termination
The test terminates automatically after printing the termination print.

109	E – – – – – 109	F – – – – – 109
Normal end print	Error print	SSP table full print (NOTE)

Note: In this SSP check, set the data for check in the empty area of SSP entry REG and erase the data for check after completion of check. Therefore, SSP setting before check is not cleared. If, therefore, there is no SSP entry REG remained for SSP check, F-print (SSP entry register full print) is performed to terminate the program without check.

[9] Drawer open sensor test

1 Key operation
110~111 → TL

2 Functional description
The drawer indicated by the job number is opened to check the proper action.
Drawer opened: O indicated
Drawer closed: C indicated
110: Drawer-1: Standard drawer
111: Drawer-2: Remote drawer

DOT DISPLAY: D R A W E R Y S R V
7-SEGMENT DISPLAY: X

X: O= Drawer opened
C= Drawer closed
Y: 1 or 2

3 Check the following items:
a) Check opening of the specified drawer.
b) Check the display indication when the drawer is open and closed.

4 Any key depression terminates the test with the termination print.

Test termination print	11X
	X: 0~1

[10] Display test-2

1 Key operation
116 → TL

2 Functional description
The display CGs in CKDC6 are checked. The 256 CGs are grouped into 32 blocks and each 8 characters is displayed on the dot display.
The check start with CG code 00H - 07H, and the following blocks are sequentially displayed when any key is pressed.

DOT DISPLAY: ABCDEFGH S R V
7-SEGMENT DISPLAY: 1 2 3 4 5 6 7 8 9 0

è : CG display position

3 Check the following items.
1. Check that the display is normal.
2. Check that there is no blur, defects, and unevenness.

4 Test termination
To terminate the test, set the mode key to any mode other than SRV mode.

116
Test termination print

[11] I/R interface test

For I/R communication test, A460 or A470 is used as the checker.

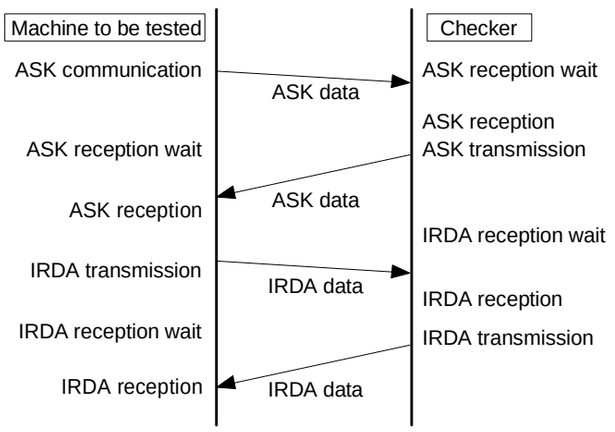

1 Key operation
Perform key operation of 117 → TL to set the checker side to the reception wait state.
On the machine to be tested, perform the following key operation.
118 → TL

2 Details of test

1) Machine to be tested
The following data are transmitted in the ASK format.

Transmission data (9600BPS) 00,11,22,33,44,55,66,77,88, 99,AA,BB,CC,DD,EE,FF

DOT DISPLAY: I / R S E N D S R V
7-SEGMENT DISPLAY:

1') Checker

DOT DISPLAY: I / R R C E V S R V
7-SEGMENT DISPLAY:

After receiving the data, they are transmitted in the ASK format.

DOT DISPLAY: I / R S E N D S R V
7-SEGMENT DISPLAY:

2) Machine to be tested

DOT DISPLAY: I / R R C E V S R V
7-SEGMENT DISPLAY:

If received data are the same as the transmitted data, it is normal.

Normal reception print	ASK	OK
Abnormal reception print	ASK	NG

After completion of printing, the following data are sent in the IRDA format.

Transmission data (9600BPS) 00,11,22,33,44,55,66,77,88, 99,AA,BB,CC,DD,EE,FF

DOT DISPLAY: I / R S E N D S R V
7-SEGMENT DISPLAY:

2') Checker

DOT DISPLAY: I / R R C E V S R V
7-SEGMENT DISPLAY:

After receiving the data, they are sent in the IRDA format.

DOT DISPLAY: I / R S E N D S R V
7-SEGMENT DISPLAY:

3) Machine to be tested

DOT DISPLAY: I / R R C E V S R V
7-SEGMENT DISPLAY:

If received data are the same as the transmitted data, it is normal.

Normal reception print	IRDA	OK
Abnormal reception print	IRDA	NG

3 Check item
Check the print contents (both ASK OK and IRDA OK).

4 Test end
The end print is made and the test is automatically terminated.

[12] Standard RAM test

1 Key operation
120 → TL

2 Functional description
Perform the following check for the standard RAM 32 KByte SRAM. The memory contents should not be changed before and after the check.

Perform the following processes for memory address to be checked (1C0000H~1DFFFFH).
PASS1: Save memory data.

PASS2: Write data "0000H."
PASS3: Read and compare data "00H," write data "55H."
PASS4: Read and compare data "55H," write data "AAH."
PASS5: Read and compare data "AAH."
PASS6: Restore the memory data.

If a compare error occurs in the check sequence PASS1-PASS6, an error print is made. If no error occurs through all address, the check ends normally.

The following address check is performed further.
Check point address = 1C0000H, 1C0001H
1C0002H, 1C0004H
1C0008H, 1C0010H
1C0020H, 1C0040H
1C0080H, 1C0100H
1C0200H, 1C0400H
1C0800H, 1C1000H
1C2000H, 1C4000H
1C8000H, 1D0000H

DOT DISPLAY: S − R A M T S S R V

7-SEGMENT DISPLAY:

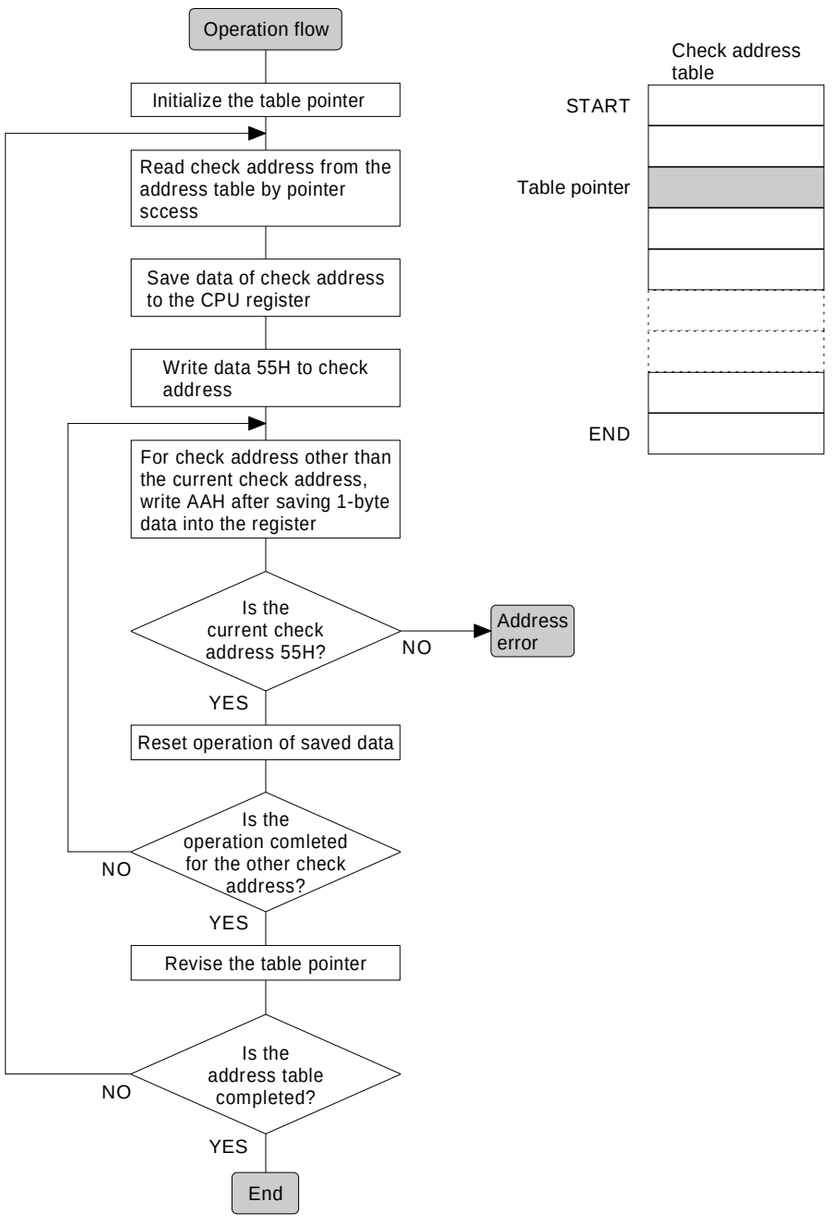

3 Check the following items:
Check the termination printout.

4 Test termination
The test terminates after printing the termination printout.
Termination printout:

Normal termination		120
Abnormal termination	Ex – – – – –	120
		@@@@@

X = 01: Data check error
02: Address check error

Note: When an error occurs, the error print is performed and the check is terminated. The error occurrence address is shown in hexadecimal at positions shown with @@@@@ .

[13] Standard ROM test

1 Key operation
130 → TL

2 Functional description
Sum check of the standard ROM (C00000H - C3FFFFH) is performed. If the lower two digits of SUM is 10H, it is normal.

DOT DISPLAY: S – R O M T S S R V

7-SEGMENT DISPLAY:

3 Check the following items:
Check the printout after the test.

4 Test termination
The test automatically terminates with termination message.

Normal termination print		130
	ROM	27020@@@@@
		@@@@@
Error termination print	E – – – –	130
	ROM	27020@@@@@
		@@@@@

Note: "@@@@@ " means the ROM version number.
The underlined section (10 bytes) of code table is provided in the ROM as a standard and the table content is always printed.
The table position is the upper 10 digits of the ROM address.
The check sum correction address is the last address -0FH.

Note: In the case of the ER-ROM, the ROM version number is displayed in the upper and the lower stages.
In the case of the MASK-ROM (future specification), the MASK ROM code is displayed in the upper stage, and the ROM version number is displayed in the lower stage.

	130
ROM	27020RAU1A
	RAU1A
	400

[14] R/J printer dot pulse width adjustment

The dot pulse width adjust circuit is provided to control the width of the current applied to the dot head of the printer, according to a supply voltage fluctuation.
When the circuit is changed with a new one for such as a repair work, the dot pulse width needs to be adjusted using the 200K pot VR1.

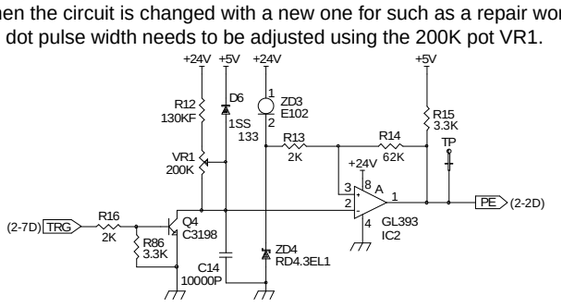

Fig. 3-3

Dot pulse adjusting method

1. Turn power on.
2. Measure the voltage of the VP line between the fuse F1 and GND. Use a digital voltmeter capable of measuring 100mV steps.
3. Set the MODE switch to the SRV position and start the diagnostic program Job #150 with the next command procedure.
   150 → TL
4. Adjust pulse width of PE at the test point TP1 as shown in the graph in Fig.3. The pulse width of PE can be adjusted using the 200K pot VR1.
5. To terminate the diagnostic program, press any key.

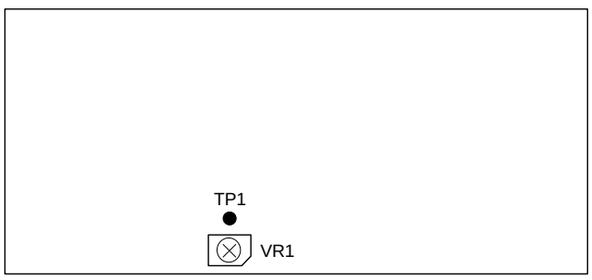

Flg. 3-4

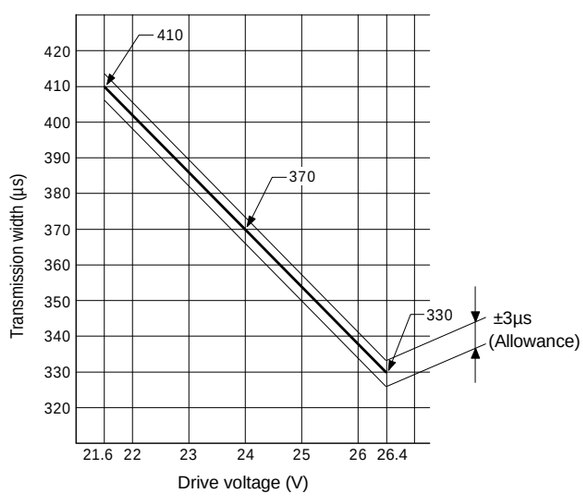

Fig. 3-5

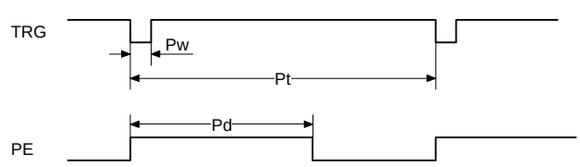

Pw ≒ 4µsec
Pt ≧ 1000µsec
Pd is adjusted to 373±3µsec. when Vp is +24.0V.

Fig. 3-6

[15] Option RAM test

1 Key operation
200 → TL

JOB #NO.	RAM NO.	Memory to be checked	Address area to be checked
200	Option RAM (main)	ER-02RA	1E0000H ~ 1FFFFFH
		ER-01RA	1E0000H ~ 1E4FFFH

2 Content
The following check are performed for the optional RAM.
The following process is performed for memory addresses to be checked.

PASS1: memory data save
PASS2: Data "00H" write
PASS3: Data "00H" read and comparison, data "55H" write
PASS4: Data "55H" read and comparison, data "AAH" write
PASS5: Data "AAH" read and comparison
PASS6: Memory data restore

If a compare error is found in the check sequence from PASS1 to PASS6, error print (error code E1) is performed. If there is no error found to the end of the last address, the operation is completed normally.

Address to be checked
1E0000H, 1E0001H
1E0002H, 1E0004H
1E0008H, 1E0010H
1E0020H, 1E0040H
1E0080H, 1E0100H
1E0200H, 1E0400H
1E0800H, 1E1000H
1E2000H, 1E4000H
1E8000H, 1F0000H → (For ER-02RA)

DOT DISPLAY: O – R A M T S S R V
7-SEGMENT DISPLAY:

3 Check the following items.
Check the termination print.

4 Test termination
The test terminates after printing the termination printout.

Termination print

E01---01RA	200	(ER-01RA data check error)
E02---01RA	200	(ER-01RA address check error)
E01---02RA	200	(ER-02RA data check error)
E02---02RA	200	(ER-02RA address check error)
01RA	200	(ER-01RA normal end)
02RA	200	(ER-02RA normal end)

[16] Option ROM test

1 Key operation:
400 → TL

2 Functional description:
A sum check is done for the option ROM (Address hex C80000H thru C9FFFFH.)

DOT DISPLAY: O – R O M T S S R V
7-SEGMENT DISPLAY:

3 Check the following items:
Check the termination printout.

4 Test termination:
The test terminates after printing the termination printout.
Termination printout

Normal termination

	400
ROM	27010@@@@@
	@@@@@
E – – – – –	400
ROM	27010@@@@@
	@@@@@

The underlined section must be the same as the standard ROM test specification. (Refer to JOB #130.)

	400
ROM	27010RAO1A
	RAO1A

CHAPTER 6. DOWNLOAD FUNCTION

1. General

RAM data can be transmitted in the following two methods.
Save the data before servicing as follows:

1 ECR ↔ ECR

2 ECR ↔ ER-02FD

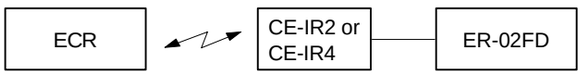

Note:	The ONL lamp on the display blinks during IR transmission. If the ONL lamp goes off during transmission, it shows that transmission is interrupted by a shift in the optical axis and retrying process is being performed. To resume transmission, adjust the optical axis. If the ON lamp blinks, transmission is resumed.

2. Communication between ECRs

1) The pop-up display of the ER-A460/A470 is equipped with the IR interface. Set the distance between IR interfaces within 75cm. Communication between ECRs is available in the ASK system and in the IRDA system.

   Note: Set the memory size (JOB #971) and the transmission baud rate (JOB #903) in the receive side and the send side identically.

   - ECR to ECR
     | : Enable✕: Disable

Baud rate (bps)	ASK	IrDA
2400	|	|
4800	|	|
9600	|	|
19200	|	|
38400	|	|
57600	|	|
115200	✕	|

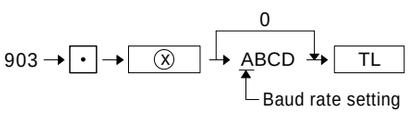

1. Baud rate (bps)	903-A
2400	2
4800	3
9600	4 ★
19200	5
38400	6
57600	7
115200	8

2) Communication sequence

   1 Set the receiving ECR ready to receive.

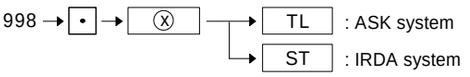

   2 Set the sending ECR.

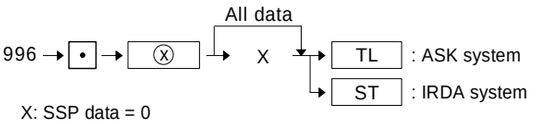

3) Transmission status.
   Description of error status
   1: Application error (Command error)
   2: Line error (DTR OFF)
   3: Application error (Parity error)
   4: Application error (Check sum error)
   5: Application error (Data size error)
   6: Hard ware error
   7: Power off error
   10: Time out error
   11: Application error (Transmit data size error)
   12: Application error (Block sequence error)
   13: Memory full error

4) Service reset the receiving ECR.

3. Communication between an ECR and the ER-01FD/02FD

1) The ER-A460/A470 can perform IR communication by connecting the IR interface (CE-IR2/IR4) to the FD unit (ER-01FD/02FD). The transmission is made only in the ASK system.

2) ER-01FD/02FD ROM replacement
   To perform IR communication with the ER-01FD or the ER-02FD, the control ROM must be replaced.

   New control ROM version for IR communication

	Version No.	Parts code
ER-01FD	R261C	VHI27256R261C
ER-02FD	RAG1D	VHI27256RAG1D

3) Connection between the ER-01FD/02FD and the CE-IR2/IR4
   Make the connection cable and connect the FD unit and the IR interface.

   Connection cable wiring

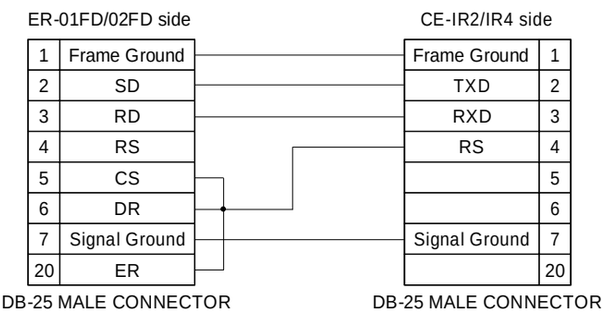

4) DIP switch setting of the ER-01FD/02FD

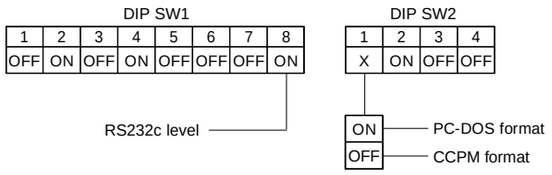

Note: When performing IR communication with the ER-A460/A470, the baud rate should be set to 19200 bps only.
The PC-DOS format cannot be used for the ER-01FD.

5) CE-IR2/IR4 setting

1 CE-IR2
The CE-IR2 is used in the ASK mode only, and requires no setting.

2 CE-IR4
When the power switch of CE-IR4 is turned on, the mode is set to the ASK mode. The ASK mode is retained until the power switch is turned off.

6) Saving data

1 Turn on the power switch and insert a floppy disk which has been formatted.

2 Start the SEND JOB on the ECR side as follows:

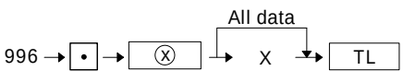

X: 0 = SSP

3 Data transmission is started and the green lamp on the ER-02FD blinks.

7) Loading data

1 Turn on the power switch and insert the floppy disk which stores the data.

2 Start the RECEIVE JOB on the ECR side as follows:

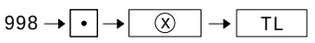

3 Press the SEND key on the FD unit.

4 Data transmission is started and the Green lamp on the ER-02FD blinks.

5 Service reset the ECR.

CHAPTER.7 CIRCUIT DIAGRAM & PWB LAYOUT

1/7

1. Main PWB circuit diagram

CPU (HD6415108)

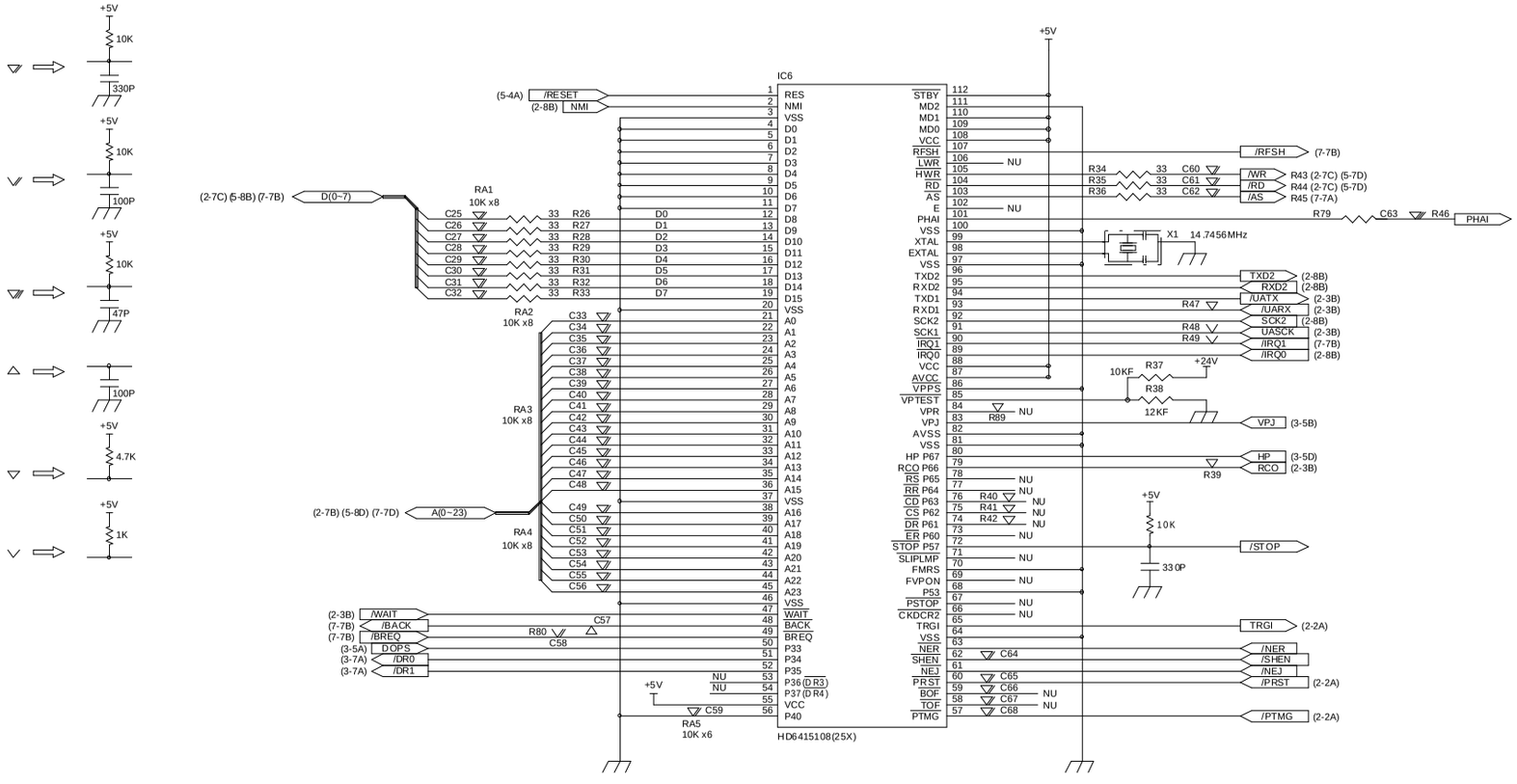

Gate array (MPCA6)

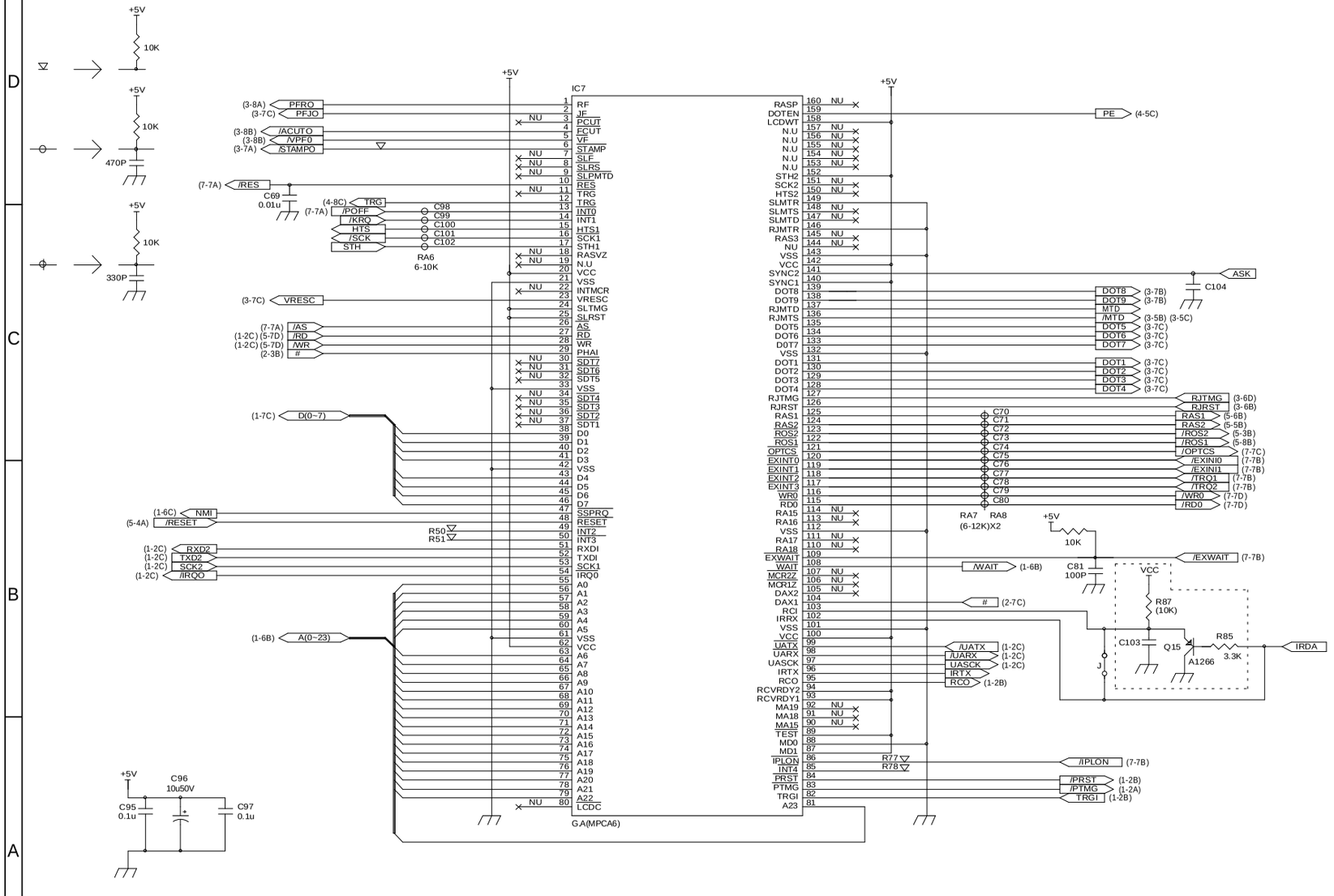

Printer & Senser

3/7

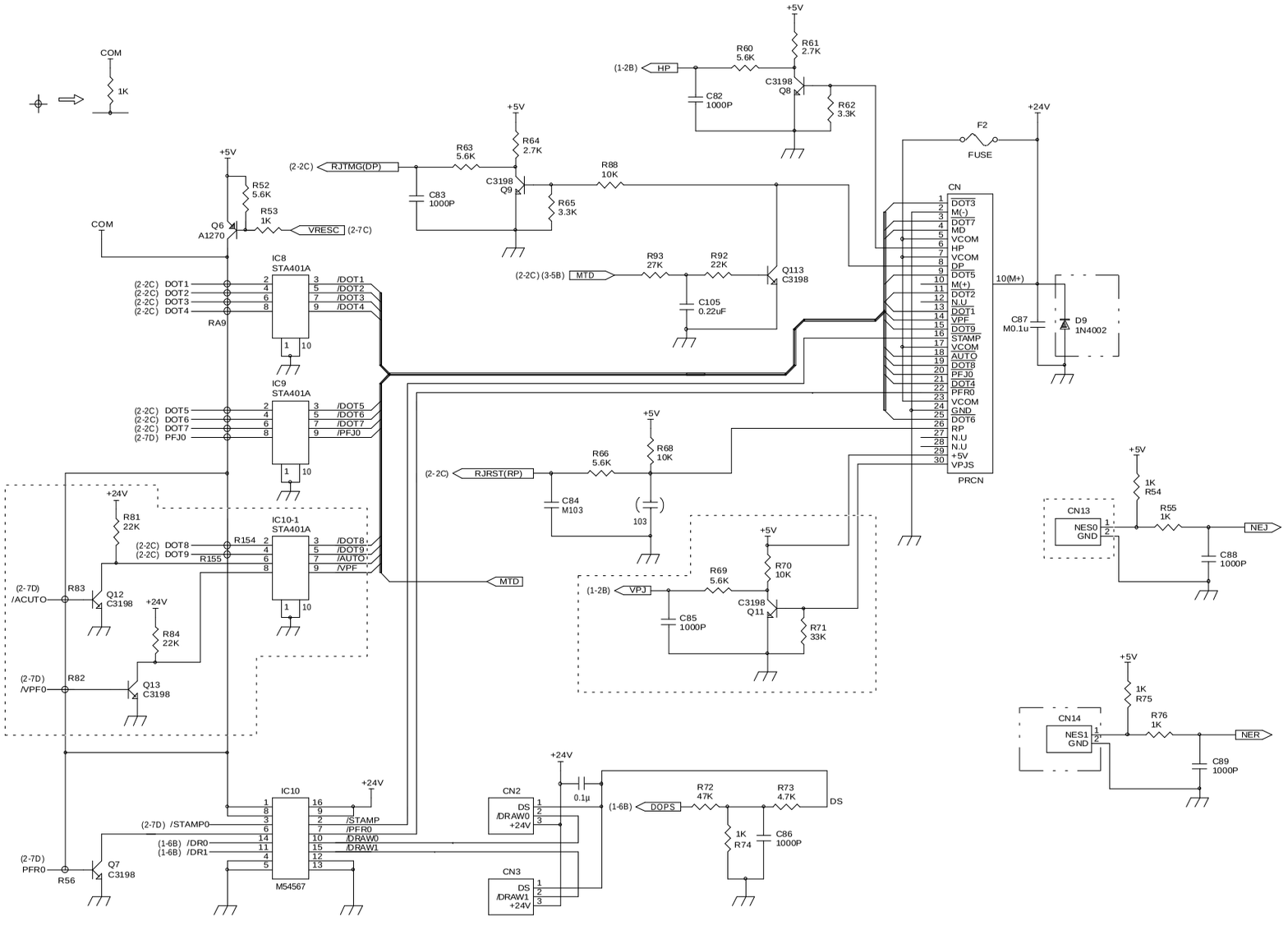

P-OFF, Dot pulse

<DOT PULSE ADJ.>

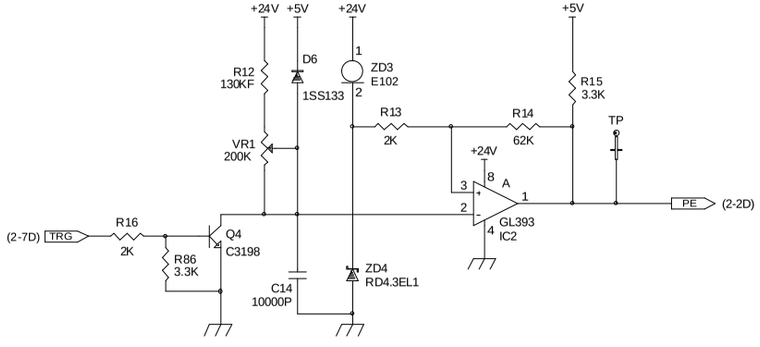

<P-OFF CIRCUIT>

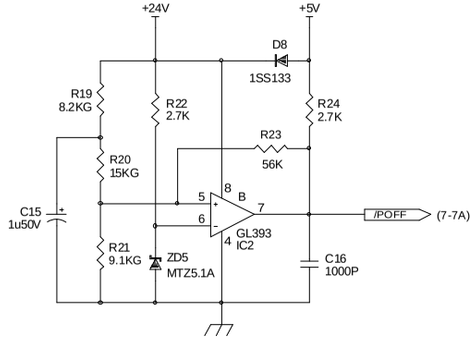

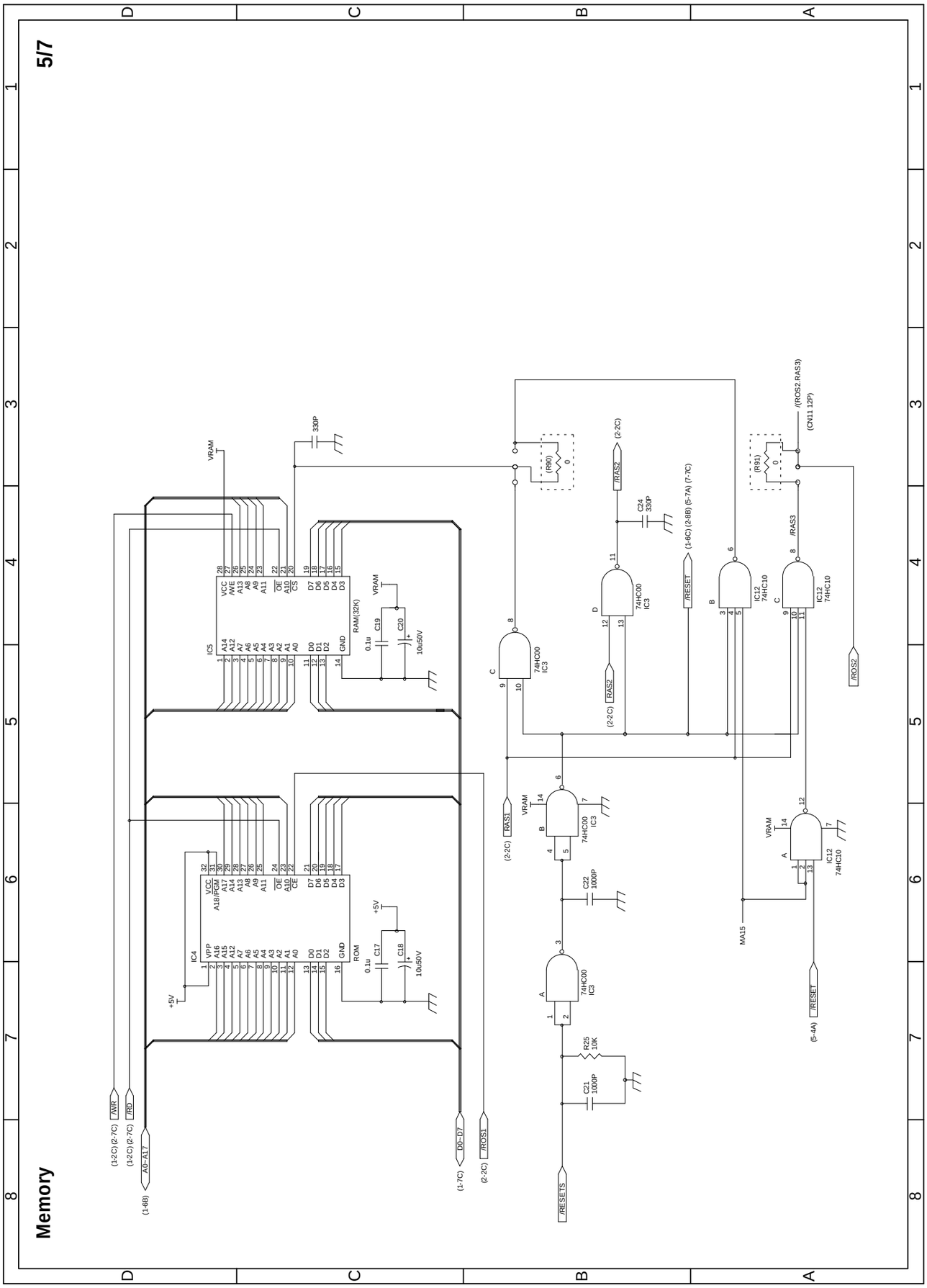
Memory
5/7
IC5
RAM(32K)
IC4
ROM
74HC00
IC3
74HC10
IC12
74HC30
VRAM
+5V
330P
C19
C20
C17
C18
C21
C22
C24
R25
10K
(R90)
(R91)
/RAS2
/RAS3
/RESET
/ROS2
/ROS1
/RESETS
/WR
/RD
A0~A17
D0~D7
RAS1
MA15
(CN11 12P)
(1-6B)
(1-7C)
(2-2C)
(5-4A)
(1-6C) (2-8B) (5-7A) (7-7C)

Power supply

6/7

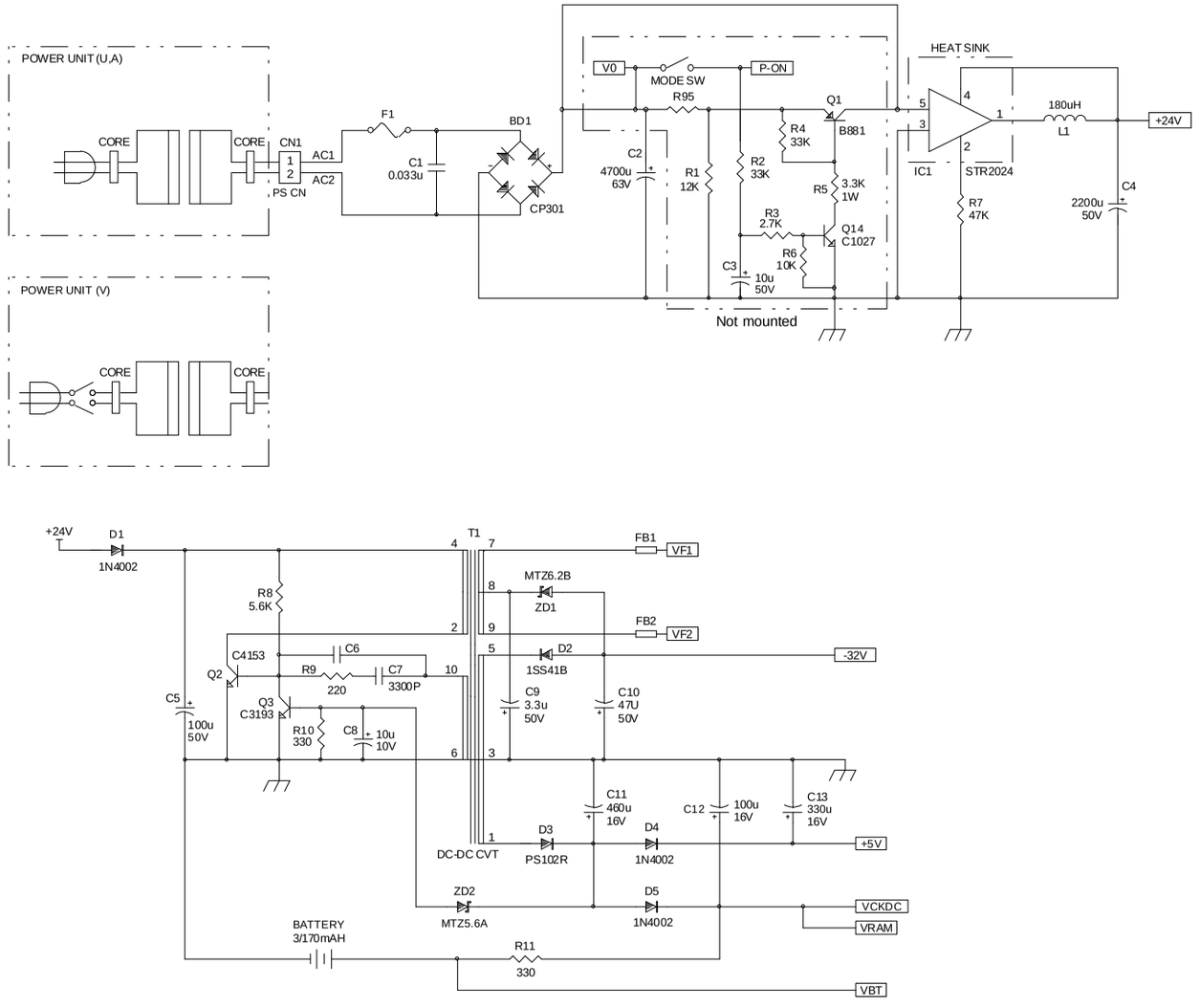

Main PWB connector

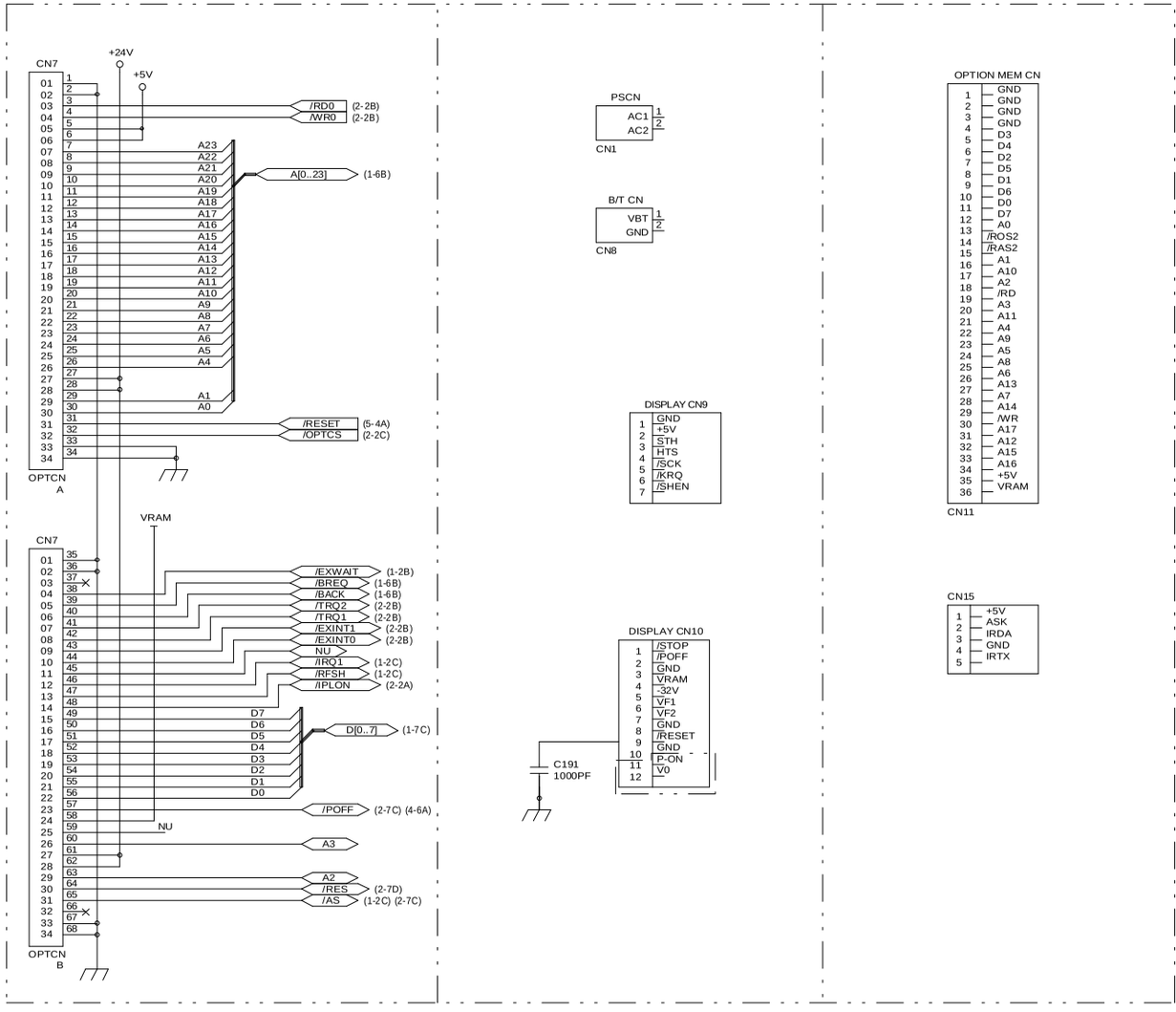

2. Main PWB layout

3. Display PWB circuit diagram

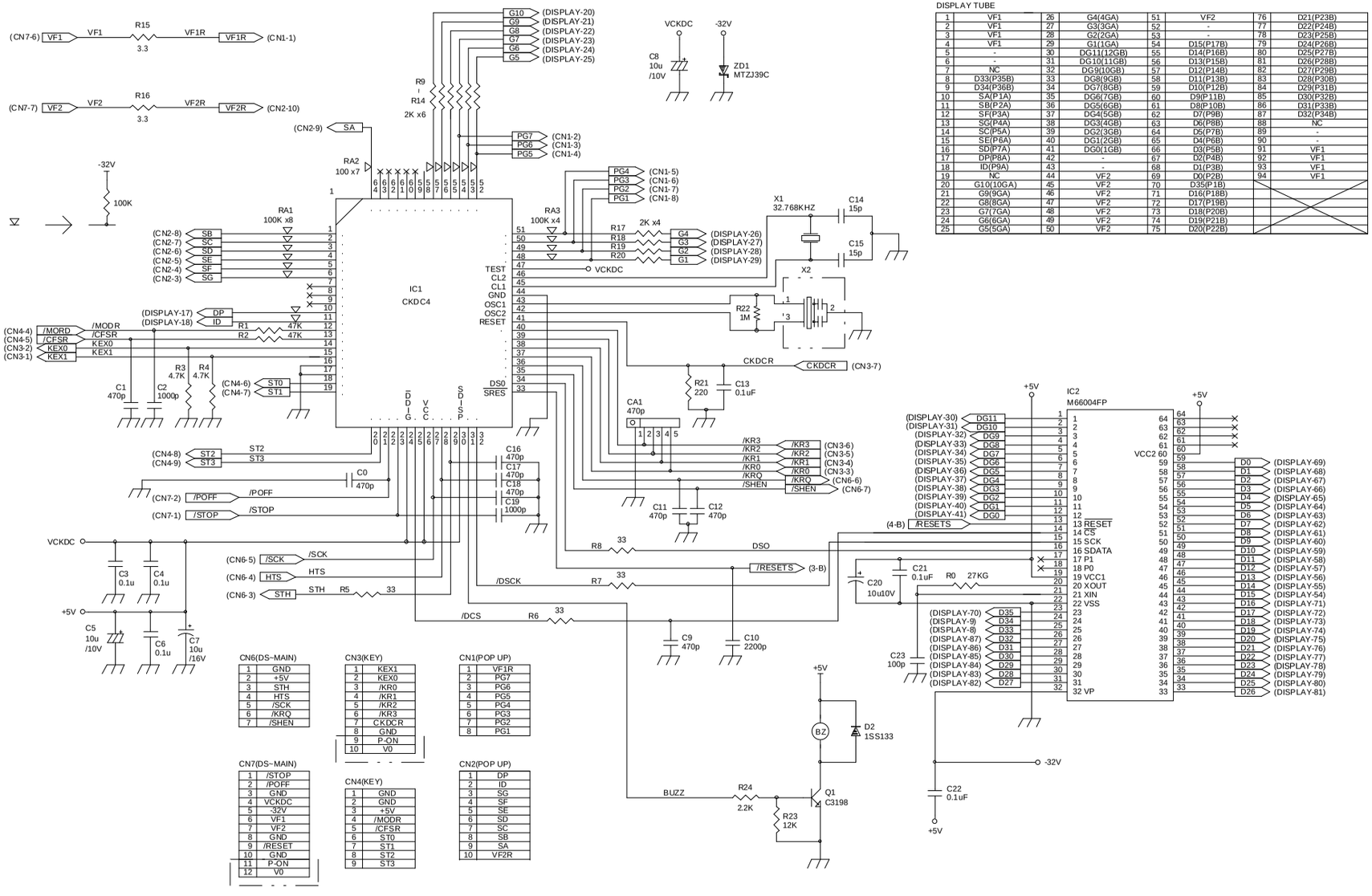

DISPLAY TUBE

1	VF1	26	G4(4GA)	51	VF2	76	D21(P23B)
2	VF1	27	G3(3GA)	52	-	77	D22(P24B)
3	VF1	28	G2(2GA)	53	-	78	D23(P25B)
4	VF1	29	G1(1GA)	54	D15(P17B)	79	D24(P26B)
5	-	30	DG11(12GB)	55	D14(P16B)	80	D25(P27B)
6	-	31	DG10(11GB)	56	D13(P15B)	81	D26(P28B)
7	NC	32	DG9(10GB)	57	D12(P14B)	82	D27(P29B)
8	D33(P35B)	33	DG8(9GB)	58	D11(P13B)	83	D28(P30B)
9	D34(P36B)	34	DG7(8GB)	59	D10(P12B)	84	D29(P31B)
10	SA(P1A)	35	DG6(7GB)	60	D9(P11B)	85	D30(P32B)
11	SB(P2A)	36	DG5(6GB)	61	D8(P10B)	86	D31(P33B)
12	SF(P3A)	37	DG4(5GB)	62	D7(P9B)	87	D32(P34B)
13	SG(P4A)	38	DG3(4GB)	63	D6(P8B)	88	NC
14	SC(P5A)	39	DG2(3GB)	64	D5(P7B)	89	-
15	SE(P6A)	40	DG1(2GB)	65	D4(P6B)	90	-
16	SD(P7A)	41	DG0(1GB)	66	D3(P5B)	91	VF1
17	DP(P8A)	42	-	67	D2(P4B)	92	VF1
18	ID(P9A)	43	-	68	D1(P3B)	93	VF1
19	NC	44	VF2	69	D0(P2B)	94	VF1
20	G10(10GA)	45	VF2	70	D35(P1B)		
21	G9(9GA)	46	VF2	71	D16(P18B)		
22	G8(8GA)	47	VF2	72	D17(P19B)		
23	G7(7GA)	48	VF2	73	D18(P20B)		
24	G6(6GA)	49	VF2	74	D19(P21B)		
25	G5(5GA)	50	VF2	75	D20(P22B)		

CN6(DS~MAIN)

1	GND
2	+5V
3	STH
4	HTS
5	/SCK
6	/KRQ
7	/SHEN

CN3(KEY)

1	KEX1
2	KEX0
3	/KR0
4	/KR1
5	/KR2
6	/KR3
7	CKDCR
8	GND
9	P-ON
10	V0

CN1(POP UP)

1	VF1R
2	PG7
3	PG6
4	PG5
5	PG4
6	PG3
7	PG2
8	PG1

CN7(DS~MAIN)

1	/STOP
2	/POFF
3	GND
4	VCKDC
5	-32V
6	VF1
7	VF2
8	GND
9	/RESET
10	GND
11	P-ON
12	V0

CN4(KEY)

1	GND
2	GND
3	+5V
4	/MODR
5	/CFSR
6	ST0
7	ST1
8	ST2
9	ST3

CN2(POP UP)

1	DP
2	ID
3	SG
4	SF
5	SE
6	SD
7	SC
8	SB
9	SA
10	VF2R

4. Display PWB layout

5. POP-up display PWB circuit diagram

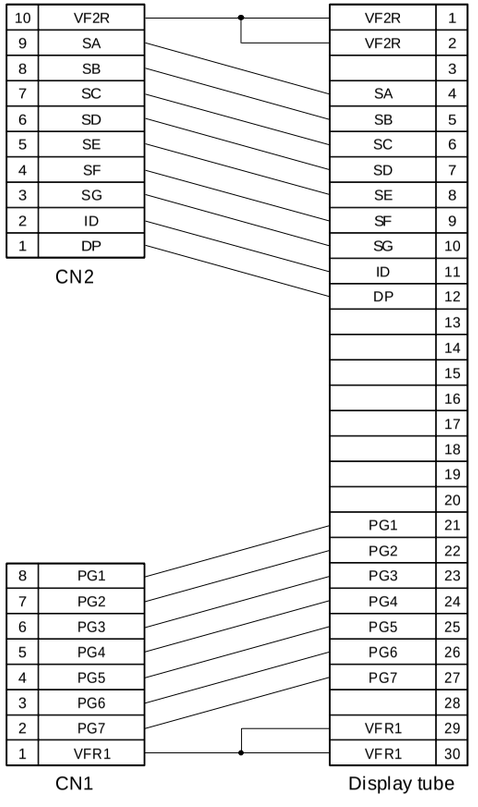

6. POP-up display PWB layout

7. IR PWB unit circuit diagram

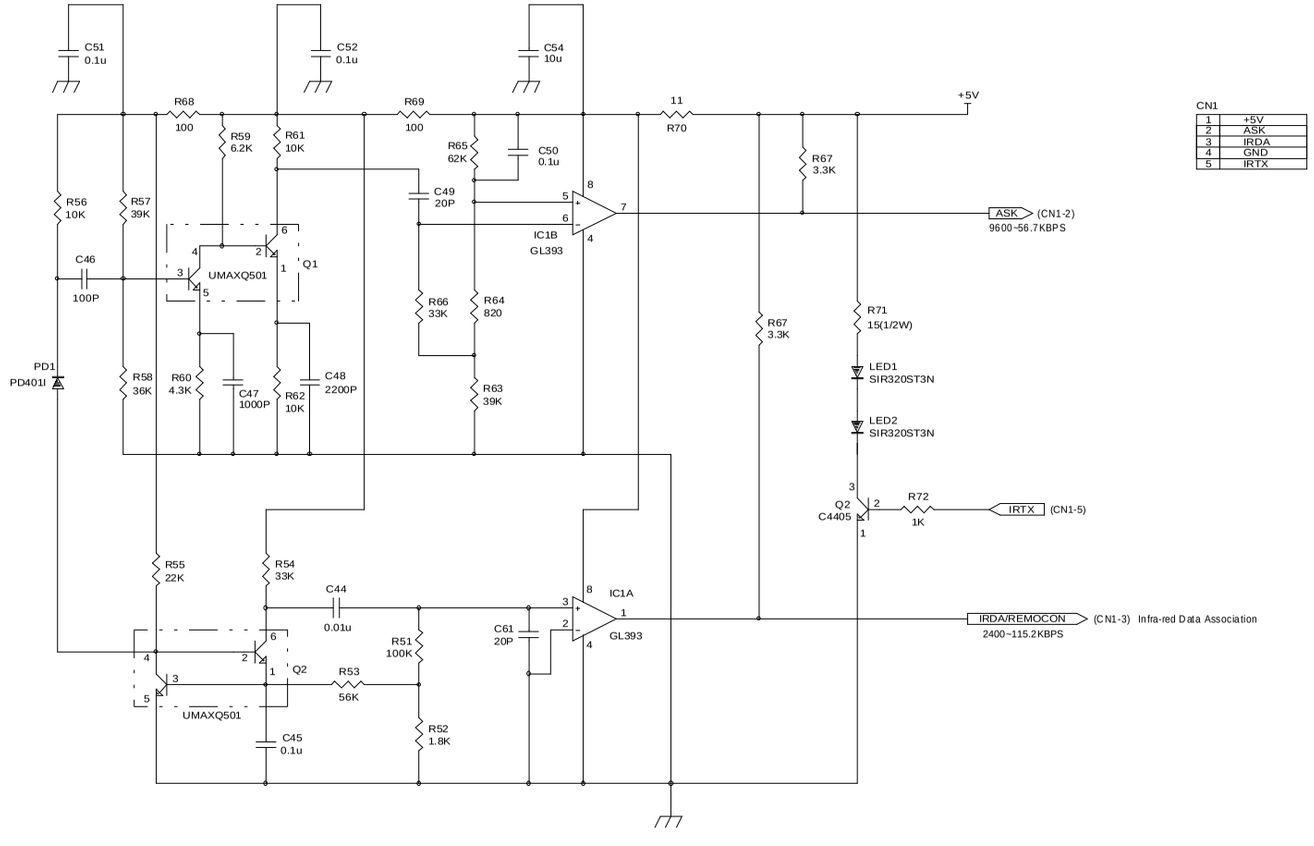

CN1

1	+5V
2	ASK
3	IRDA
4	GND
5	IRTX

8. IR PWB layout

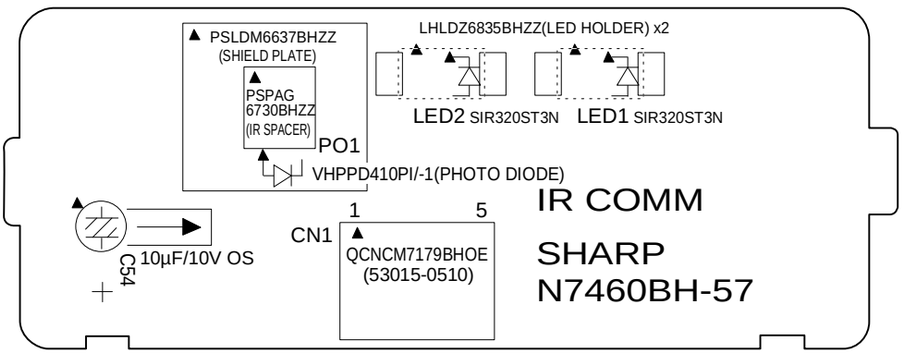

9. Option memory PWB circuit diagram

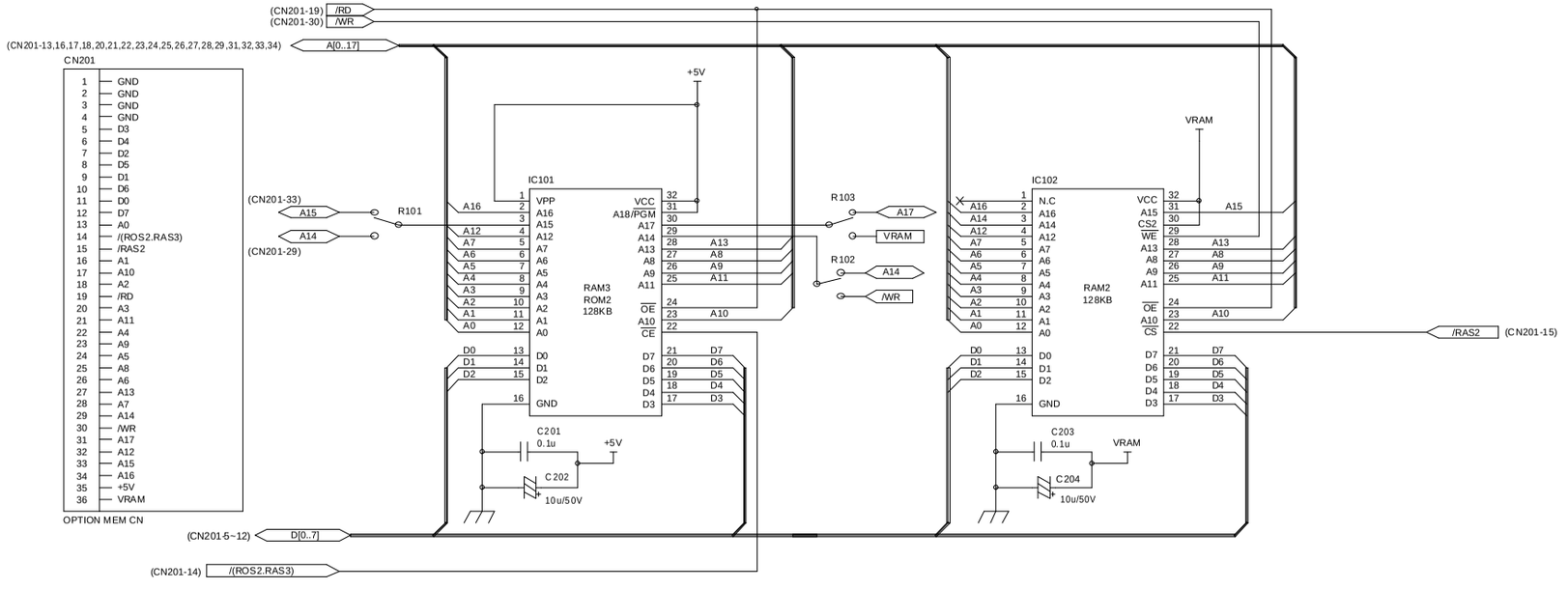

10. Option memory PWB layout

11. Keyboard I/F PWB unit circuit diagram (ER-A460: Normal keyboard)

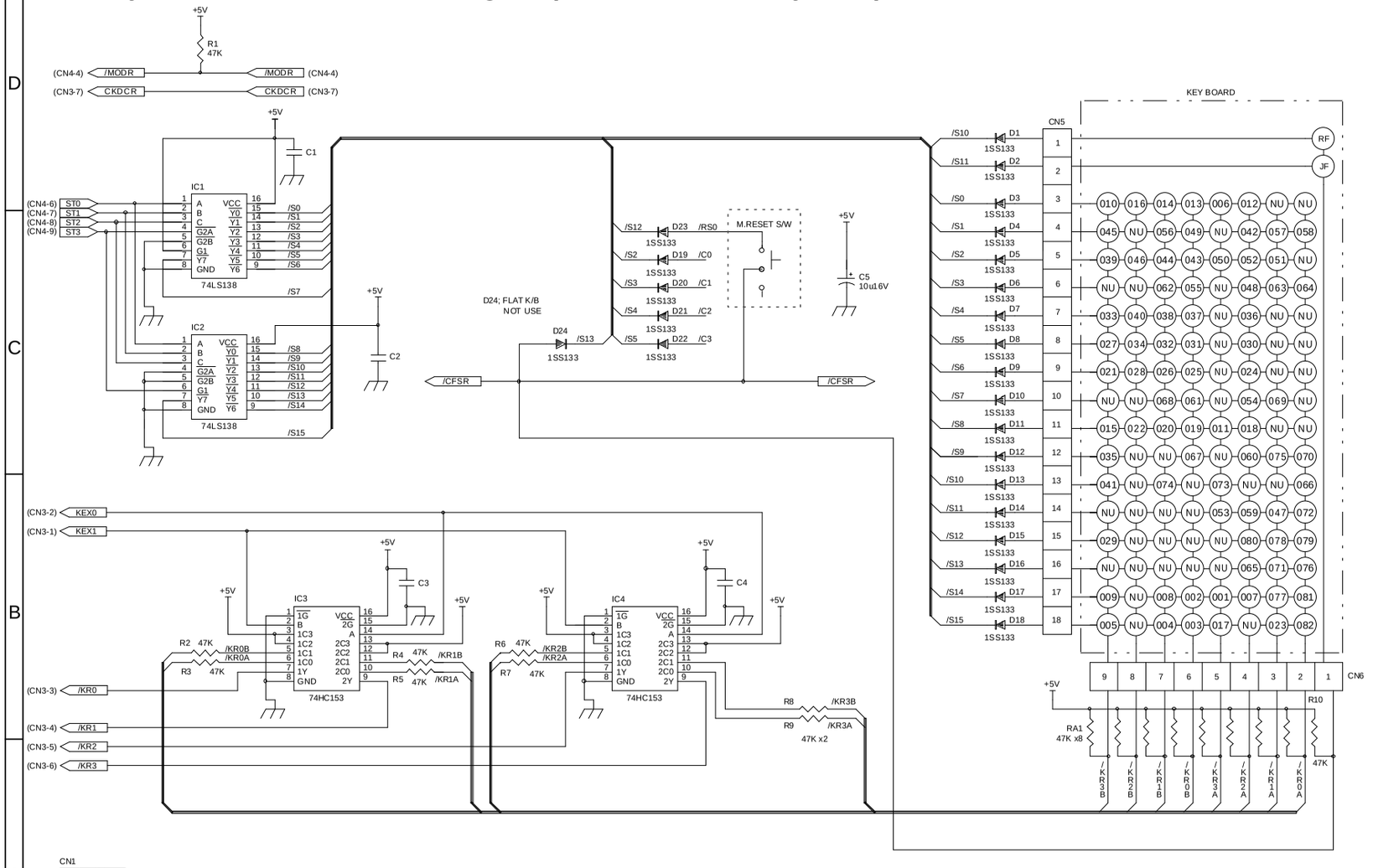

CN1

1	/C0
2	/C1
3	/CFSR

CLREK SW

CN8

1	/C2
2	/C3
3	/CFSR

CLERK SW

CN2(MODE SW)

	-	P-ON	4	/S2	9	/S6
		V0	5	/S3	10	/S7
1	-	+5V	6	/MODR	11	/S8
2		CKDCR	7	/S4		
3		/S1	8	/S5		

CN3(IF~DISPLAY)

1	KEX1	6	/KR3
2	KEX0	7	CKDCR
3	/KR0	8	GND
4	/KR1	9	P-ON
5	/KR2	10	V0

CN4(IF~DISPLAY)

1	GND	6	ST0
2	GND	7	ST1
3	+5V	8	ST2
4	/MODR	9	ST3
5	/CFSR		

CN5

1	/CFSR
2	/RS0

Key position code (ER-A460)

↑R	↑J	016	022	028	034	040	046	052	058	064	070	076	082
005	010	015	021	027	033	039	045	051	057	063	069	075	081
004	009	014	020	026	032	038	044	050	056	062	068	074	080
003	008	013	019	025	031	037	043	049	055	061	067	073	079
002	007	012	018	024	030	036	042	048	054	060	066	072	078
001	006	011	017	023	029	035	041	047	053	059	065	071	077

12. Keyboard I/F PWB unit circuit diagram (ER-A470: Flat keyboard)

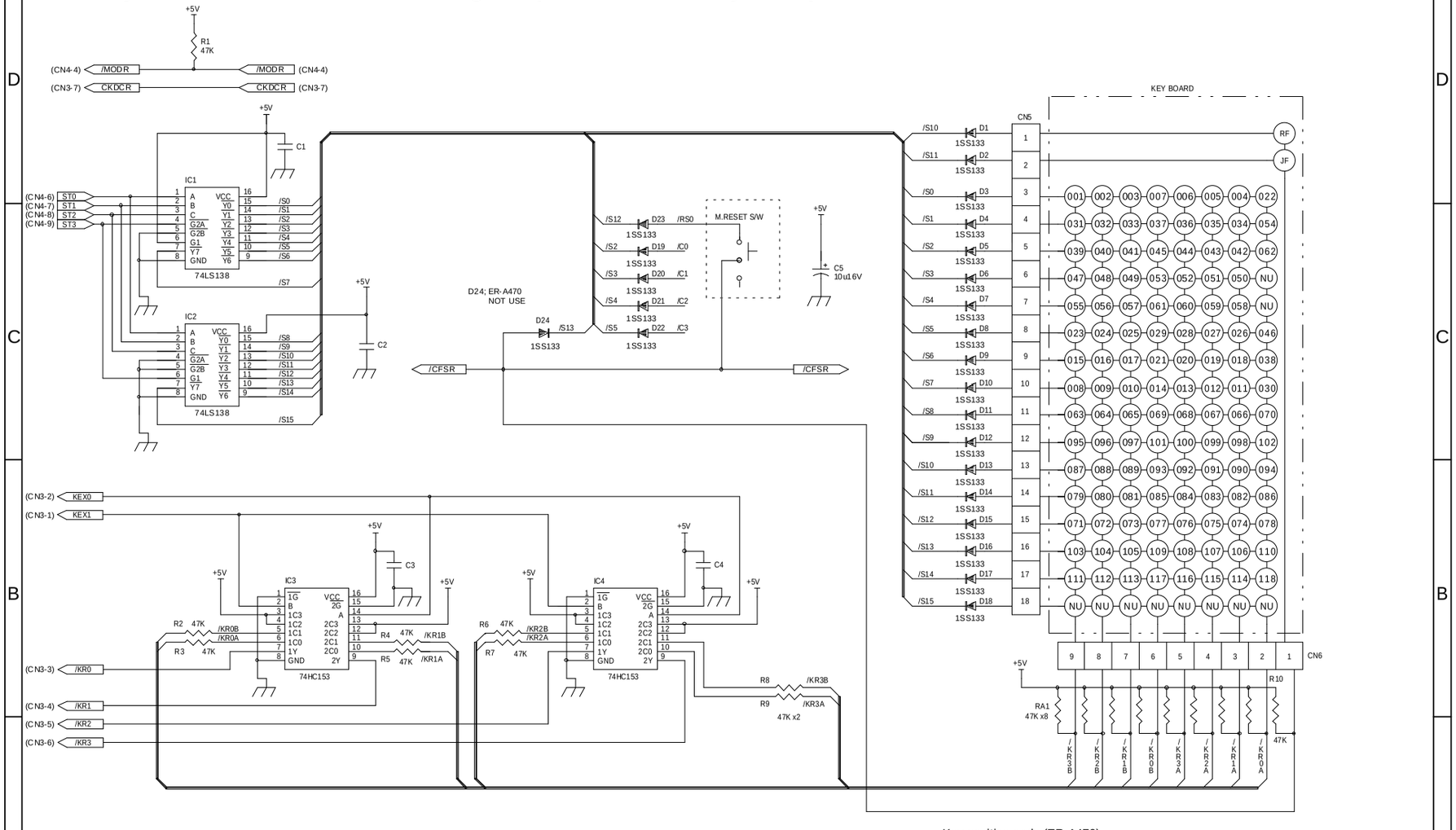

CN1

1	/C0
2	/C1
3	/CFSR

CLREK SW

CN8

1	/C2
2	/C3
3	/CFSR

CLERK SW

CN2(MODE SW)

	-	P-ON	4	/S2	9 /S6
		/V0	5	/S3	10 /S7
1	-	+5V	6	/MODR	11 /S8
2		CKDCR	7	/S4	
3		/S1	8	/S5	

CN3(IF-DISPLAY)

1	KEX1	6	/KR3
2	KEX0	7	CKDCR
3	/KR0	8	GND
4	/KR1	9	P-ON
5	/KR2	10	V0

CN4(IF-DISPLAY)

1	GND	6	ST0
2	GND	7	ST1
3	+5V	8	ST2
4	/MODR	9	ST3
5	/CFSR		

CN5

1	/CFSR
2	/RS0

Key position code (ER-A470)

↑R	↑J	022	030	038	046	054	062	070	078	086	094	102	110	118
007	014	021	029	037	045	053	061	069	077	085	093	101	109	117
006	013	020	028	036	044	052	060	068	076	084	092	100	108	116
005	012	019	027	035	043	051	059	067	075	083	091	099	107	115
004	011	018	026	034	042	050	058	066	074	082	090	098	106	114
003	010	017	025	033	041	049	057	065	073	081	089	097	105	113
002	009	016	024	032	040	048	056	064	072	080	088	096	104	112
001	008	015	023	031	039	047	055	063	071	079	087	095	103	111

13. Keyboard PWB layout

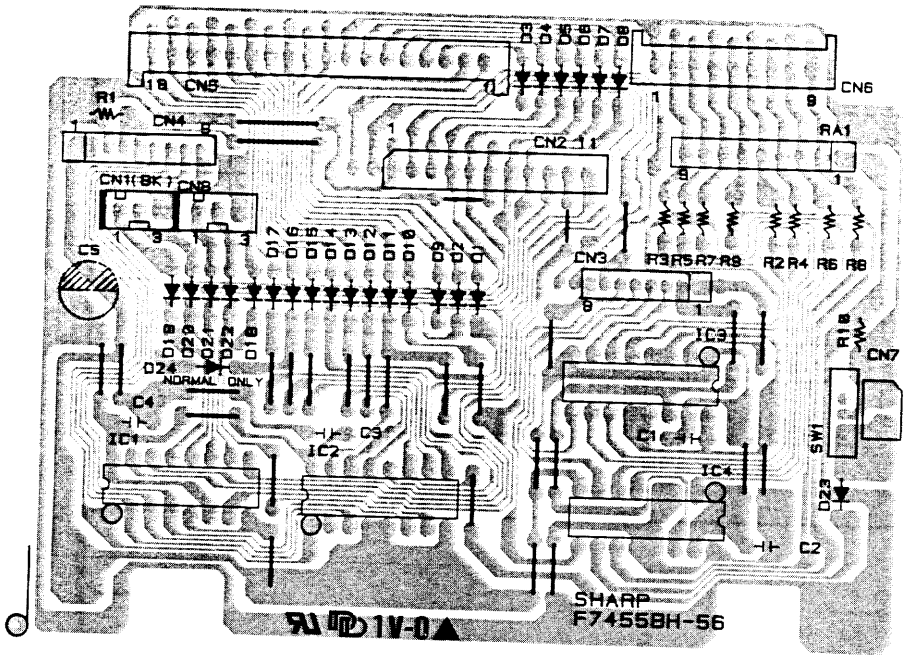

SHARP PARTS GUIDE

ER-A460
MODEL ER-A470

(for KA, KB, TQ, TR, TS)

PRINTER: DP-730

CONTENTS

1 Top cabinet etc.[ER-A460]
2 Top cabinet etc.[ER-A470]
3 Bottom cabinet etc.
4 Drawer box unit(SK423 type)
5 Packing material & Accessories
6 Main PWB unit
7 Key I/F PWB unit
8 Display PWB unit
9 IR PWB unit
10 Pop-up PWB unit
11 ROM/RAM PWB unit
12 Articles for consumption
13 Service route options & Service tools
■ Index

Because parts marked with "⚠" is indispensable for the machine safety maintenance and operation, it must be replaced with the parts specific to the product specification.

Table of destinations

SELECTION CODE	COUNTRIES
U	U.S.A., Guam
A	Canada
TS	Germany
TQ	SEEG territory other than Germany (Stamp: English)
TR	SEEG territory other than Germany (Stamp: Spanish)
KB	U. Kingdom
KA	Australia

SELECTION CODE	COUNTRIES
K	Korea

SELECTION CODE	COUNTRIES
SB	Saudi Arabia (127V area)
SBA	Saudi Arabia (220V area)
SC	Taiwan
SD	Venezuela
SE	Hong Kong
SG	Lebanon, Syria, Greece, Pakistan, Iran, Egypt, Thailand, Iraq, Mauritius, Seychelles, Tahiti, Jordan, Sudan, Turkey
SH	South Africa (U.S.A.version)
SHE	South Africa (Europe version)
SJ	Phillippines (Europe version)
SJ2	Phillippines (U.S.A. version)
SM	Kuwait, Qatar, Oman, UAE, Malta, Bahrain
SMT	Nigeria, Yemen, Kenya

SELECTION CODE	COUNTRIES
RA1	Morocco, Algeria, Tunisia, West Africa
RA2	Chile, Uruguay, Peru, Argentina, Paraguay
RA5	Sri Lanka

SELECTION CODE	COUNTRIES
RB3	Indonesia
RB4	
RB5	Cyprus
RB6	Panama
RB7	Barbados
RB8	Malaysia (U.S.A. version)

SELECTION CODE	COUNTRIES
RC1	Malaysia (Europe version)
RC2	Singapore
RC5	Dominican Republic, Ecuador

1 Top cabinet etc.[ER-A460]

NO.	PARTS CODE	PRICE RANK	NEW MARK	PART RANK	DESCRIPTION
1	PFiLW6942BHZZ	AQ		D	IR filter
2	GCAB-7215BHZZ	AR		D	Pop up cabinet
3	PFiLW6943BHZZ	AS	N	D	Pop up filter
4	CPWBN7460BH01	BB		E	IR PWB unit (include No.52-54)
5	LBNDJ2003SCZZ	AA		C	Cable band (Large)
6	CPWBF7456BH01	BG		E	Pop up PWB unit
7	PFiLW6950BHZZ	AW	N	D	Display filter
8	XBBSC30P06000	AA		C	Screw (3 × 6)
9	GCABB7217BHZZ	BC		D	Top cabinet
10	HPNLC6828BHZZ	AP	N	D	Mode SW panel
11	XHPSD30P06K00	AA		C	Screw (M3 × 6K)
12	PFiLW6951BHZZ	AS		C	Journal filter
13	GCÕVA7100BHZZ	AY		D	Printer cover
14	LKGiM7356BHZZ	AK		B	Printer cover lock key
15	DUNT-1817BHZZ	AY		E	Lock key unit (Printer)
16	GCÕVA7103BHZZ	AT		D	Ribbon cover
17	LHLDW0008SCZZ	AA		C	Cable holder (5N)
18	XEBSD30P08000	AA		C	Screw (M3 × 8)
19	LANGT7583BHZZ	AS		C	Display angle
20	CPWBN7459BH01	BW		E	Display PWB unit
21	LX-BZ6782BHZZ	AA		C	Screw (3 × 8KS)
22	XJBSD30P10000	AA		C	Screw (M3 × 10)
23	RCÕRF6699BHZZ	AU		C	Core (BNF-18)
24	LHLDW6820BHZZ	AE		C	Q-clamp (L)
25	LHLDW6821BHZZ	AD		C	Q-clamp (S)
26	XEBSD30P06000	AA		C	Screw (3 × 6)
27	CPWBF7455BH03	BE	N	E	Key PWB unit (Normal)
28	LKGiM7111BHZZ	AE		B	OP key
	LKGiM7129BHZZ	AE		B	MA key
	LKGiM7110BHZZ	AE		B	SM key
29	LKGiW0001BHZZ	AS		B	Mode switch(Body)
30	QCNW-7754BHZZ	AP		C	Mode S/W cable
31	LANGT7582BHZZ	AL		C	Mode SW angle
32	XUPSD23P08000	AA		C	Screw (2.3 × 8)
33	QCNW-7753BHZZ	AP		C	IR cable (5P)
34	PRNGT6639BHZZ	AB		C	Key ring
36	JKNBZ6899BHZZ	AH		C	Key cap (1 × 2)
37	JKNBZ6898BHZZ	AH		C	Key top (1 × 2)
38	JKNBZ6909BHZZ	AK		C	Key top (X)
	JKNBZ6907BHZZ	AK		C	Key top (CL)
	JKNBZ6908BHZZ	AK		C	Key top (.)
	JKNBZ6910BHZZ	AL		C	Key top (0) (1 × 2)
	JKNBZ6911BHZZ	AK		C	Key top (1)
	JKNBZ6912BHZZ	AK		C	Key top (2)
	JKNBZ6913BHZZ	AK		C	Key top (3)
	JKNBZ6914BHZZ	AK		C	Key top (4)
	JKNBZ6915BHZZ	AK		C	Key top (5)
	JKNBZ6916BHZZ	AK		C	Key top (6)
	JKNBZ6917BHZZ	AK		C	Key top (7)
	JKNBZ6918BHZZ	AK		C	Key top (8)
	JKNBZ6919BHZZ	AK		C	Key top (9)
	JKNBZ6920BHZZ	AK		C	Key top (00)
39	JKNBZ6897BHZZ	AG		C	Key cap (1 × 1)
40	JKNBZ6896BHZZ	AG		C	Key top (1 × 1)
42	LFRM-6697BHZZ	BA		C	Key frame
43	PGUMM6724BHZZ	AY		C	Key rubber
44	LPLTM6698BHZZ	AV		C	Base plate
45	CSHEP6833BH01	BA		C	Key sheet unit
46	PSHEP6839BHZZ	AC		C	Display sheet
47	QCNW-7771BHZZ	AF		C	Earth wire
48	QCNW-7770BHZZ	AE		C	Earth wire
49	XEBSD30P10000	AA		C	Screw (3 × 10)
50	LHLDZ6836BHZZ	AE		C	Holder R
51	LHLDZ6837BHZZ	AE		C	Holder L
52	PSLDM6637BHZZ	AG		C	IR shield plate
53	PSPAG6730BHZZ	AE		C	IR spacer
54	PSLDM6638BHZZ	AG		C	Shield sheet
101	TLABH7001BHZZ	AV	N	D	Key label
501	DUNTK4939BHZZ	BR	N	E	Key board(Normal)

1 Top cabinet etc.[ER-A460]

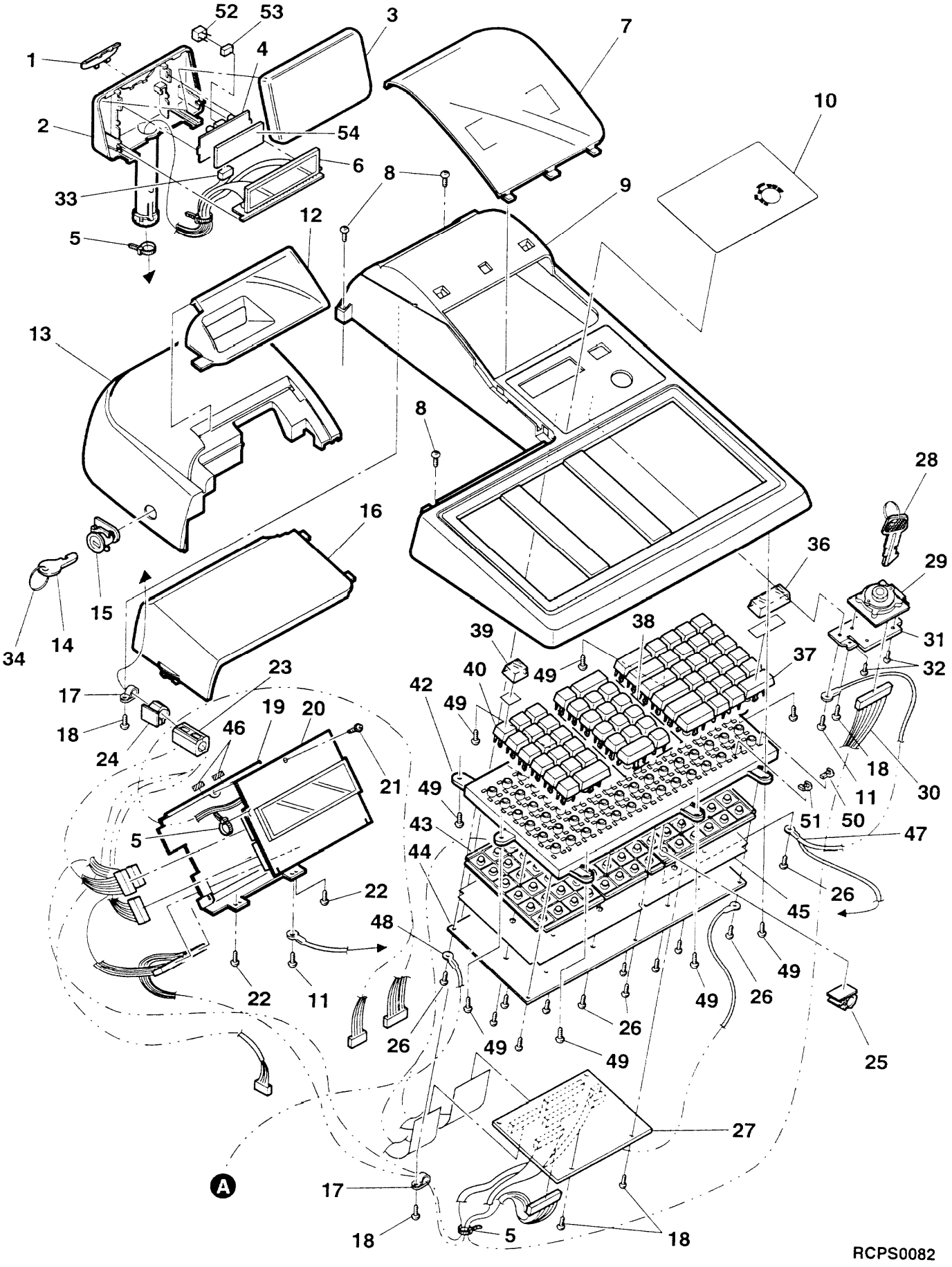

2 Top cabinet etc.[ER-A470]

NO.	PARTS CODE	PRICE RANK	NEW MARK	PART RANK	DESCRIPTION
1	PFiLW6942BHZZ	AQ		D	IR filter
2	GCAB-7215BHZZ	AR		D	Pop up cabinet
3	PFiLW6943BHZZ	AS	N	D	Pop up filter
4	CPWBN7460BH01	BB		E	IR PWB unit (include No.47~49)
5	LBNDJ2003SCZZ	AA		C	Cable band (Large)
6	CPWBF7456BH01	BG		E	Pop up PWB unit
7	PFiLW6950BHZZ	AW	N	D	Display filter
8	XBBSC30P06000	AA		C	Screw (3 × 6)
9	GCABB7214BHZZ	BC		D	Top cabinet
10	HPNLC6826BHZZ	AP	N	D	Mode SW panel
11	XHPSD30P06K00	AA		C	Screw (M3 × 6K)
12	PFiLW6951BHZZ	AS		C	Journal filter
13	GCÕVA7100BHZZ	AY		D	Printer cover
14	LKGiM7356BHZZ	AK		B	Printer cover lock key
15	DUNT-1817BHZZ	AY		E	Lock key unit (Printer)
16	GCÕVA7103BHZZ	AT		D	Ribbon cover
17	LHLDW0008SCZZ	AA		C	Cable holder (5N)
18	XEBSD30P08000	AA		C	Screw (M3 × 8)
19	LANGT7583BHZZ	AS		C	Display angle
20	CPWBN7459BH01	BW		E	Display PWB unit
21	LX-BZ6782BHZZ	AA		C	Screw (3 × 8KS)
22	XJBSD30P10000	AA		C	Screw (M3 × 10)
23	RCÕRF6699BHZZ	AU		C	Core (BNF-18)
24	LHLDW6820BHZZ	AE		C	Q-clamp (L)
25	LHLDW6821BHZZ	AD		C	Q-clamp (S)
26	XHPSD26P08000	AA		C	Screw (2.6 × 8)
27	CPWBF7455BH04	BE	N	E	Key PWB unit (Flat)
28	LKGiM7111BHZZ	AE		B	OP key
	LKGiM7129BHZZ	AE		B	MA key
	LKGiM7110BHZZ	AE		B	SM key
29	LKGiW0001BHZZ	AS		B	Mode switch(Body)
30	QCNW-7754BHZZ	AP		C	Mode SW cable
31	LANGT7582BHZZ	AL		C	Mode SW angle
32	XUPSD23P08000	AA		C	Screw (2.3 × 8)
33	QCNW-7753BHZZ	AP		C	IR cable (5P)
34	PRNGT6639BHZZ	AB		C	Key ring
36	GCÕVB7101BHZZ	BF		D	Key cover A
37	PSHEK6829BHZZ	AR	N	D	Key Sheet(Standard)
38	PSHEK6830BHZZ	AU	N	D	Sheet(Programing)
39	PSHEK6828BHZZ	AK		D	Blank key sheet
40	GCÕVB7102BHZZ	BA		D	Key cover B
41	DUNTK4938RCZZ	BE		E	Key board (Flat)
42	LHLDZ6838BHZZ	AD		C	I/F holder
43	PSHEP6840BHZZ	AE		C	Water proof sheet
44	QCNW-7771BHZZ	AF		C	Earth wire
45	QCNW-7770BHZZ	AE		C	Earth wire
46	PSHEP6839BHZZ	AC		C	Display sheet
47	PSLDM6637BHZZ	AG		C	IR shield plate
48	PSPAG6730BHZZ	AE		C	IR spacer
49	PSLDM6638BHZZ	AG		C	Shield sheet

2 Top cabinet etc.[ER-A470]

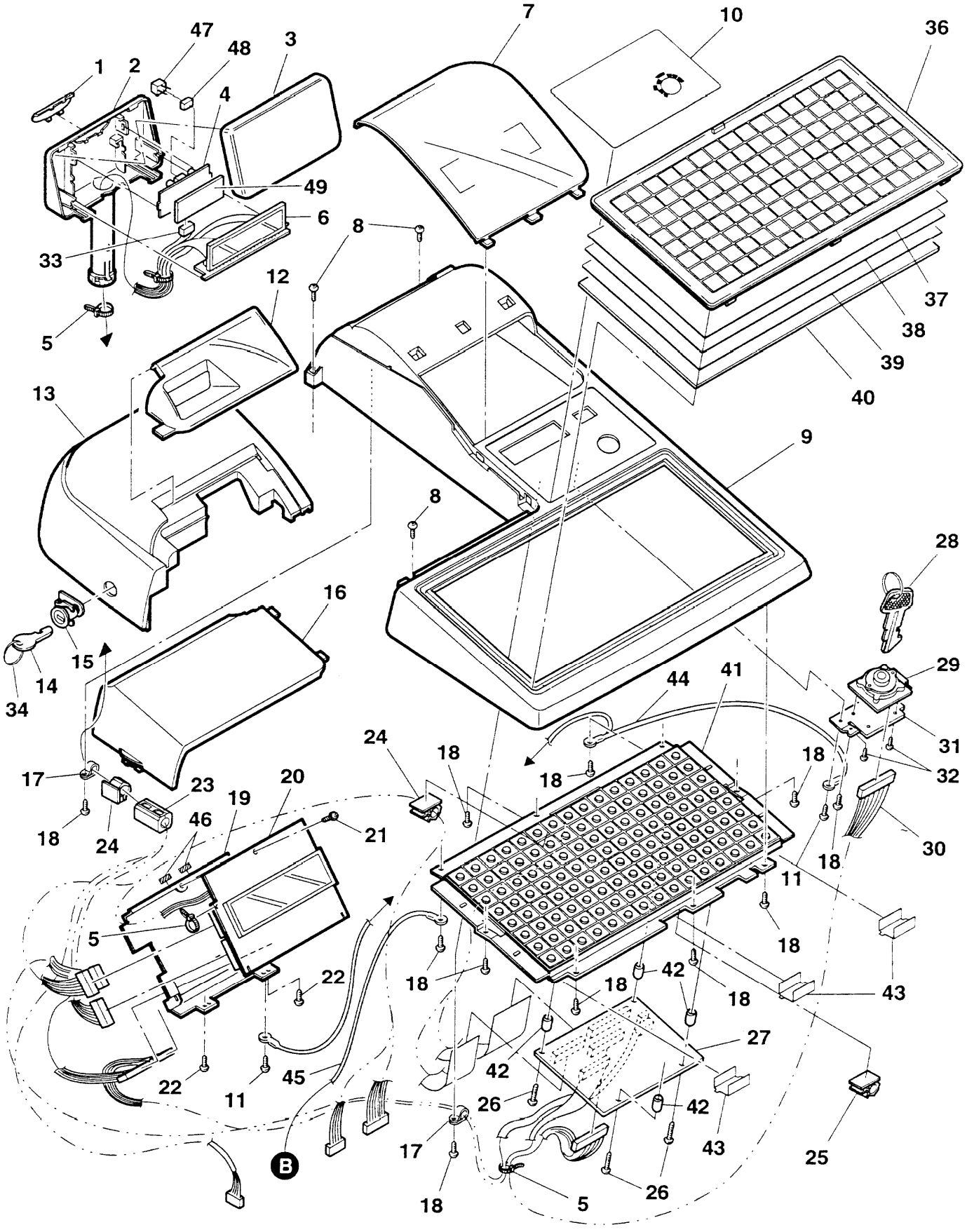

RCPS0083

3 Bottom cabinet etc.

NO.	PARTS CODE	PRICE RANK	NEW MARK	PART RANK	DESCRIPTION
⚠ 1	QACCL1018CCN1	AV		B	AC cord (7.5A) [KA]
⚠	QACCE3120QCN5	AL		B	AC cord (250V 2.5A) [TQ,TR,TS]
⚠	QCNW-1035CCZZ	AL		B	AC cord [KB]
⚠	QPLGA0006QCZZ	AQ		C	Plug (3A 250V) [KB]
2	XUBSD40P08000	AA		C	Screw (4 × 8)
⚠ 3	RTRNP6880BHZZ	BE	N	B	Power transformer (AC 220V) [TQ,TR,TS]
⚠	RTRNP6881BHZZ	BE	N	B	Power transformer (AC 240V) [KA,KB]
4	LBNDJ2003SCZZ	AA		C	Cable band
5	QCNW-7768BHZZ	AE		C	Earth wire
6	XHPSD30P06K00	AA		C	Screw (M3 × 6K)
7	XEBSD30P08000	AA		C	Screw (M3 × 8)
8	LHLDW0006SCZZ	AB		C	Cable holder (3N)
9	XHPSD30P06000	AA		C	Screw (3 × 6)
10	QCNW-7764BHZZ	AK		C	Earth wire
11	Ki-OB6778RCZZ	BY		E	Printer (DP-730)
12	XJPSD30P12X00	AB		C	Screw (3 × 12X)
13	PGUMM6699RCZZ	AB		C	Printer cushion
14	CPWBN7457BH02	CC	N	E	Main PWB unit
15	CPWBN7458BH01	BK		E	ROM/RAM PWB unit
16	QCNW-7749BHZZ	AP		C	Flat cable
17	GCOVA7105BHZZ	AU		D	ROM/RAM case
18	GCOVA7107BHZA	AL		D	Cleak cover A
19	GCABA7216BHZA	BH	N	D	Bottom cabinet
20	LPLTP6697BHZZ	AP		C	Paper plate (Dot)
21	LX-BZ1085CCZZ	AA		C	Screw (3 × 8)
22	XBBSC30P20000	AA		C	Screw (3 × 20)
23	GCOVA7104BHZZ	AV		D	Rear cover
24	LX-BZ6782BHZZ	AA		C	Screw
25	GCOVH7106BHZZ	AU		D	Trans cover
26	XUPSD40P12000	AA		C	Screw (M4 × 12)
27	RCORF6699BHZZ	AU		C	Core (BNF-18)
28	LBNDJ6636BHZZ	AD		C	B/T band
30	QCNW-7752BHZZ	AH		C	PS cable
31	TCAUS6677BHZZ	AD		D	Caution label
32	LHLDW0008SCZZ	AA		C	Cable holder (5N)
33	LHLDW6821BHZZ	AD		C	Q-clamp (S)
34	RCORF6700BHZZ	AS		C	Core
35	LBNDJ2004BHZZ	AB		C	Nylon band (140mm)
36	LCHSM6704BHZZ	AY	N	C	Main chassis
37	XHPSD40P08KS0	AA		C	Screw (M4 × 8)
38	XJBSD30P10000	AA		C	Screw (3 × 10)
39	LHLDQ6839BHZZ	AL	N	C	S/W holder
40	PSTM-6793RCZZ	AU	N	C	Stamp(English) [KA,KB,TQ,TR]
	PSTM-6798RCZZ	AV	N	C	Stamp(German) [TS]
41	RCORF6696BHZZ	AL	N	C	Core (TC28A)

3 Bottom cabinet etc.

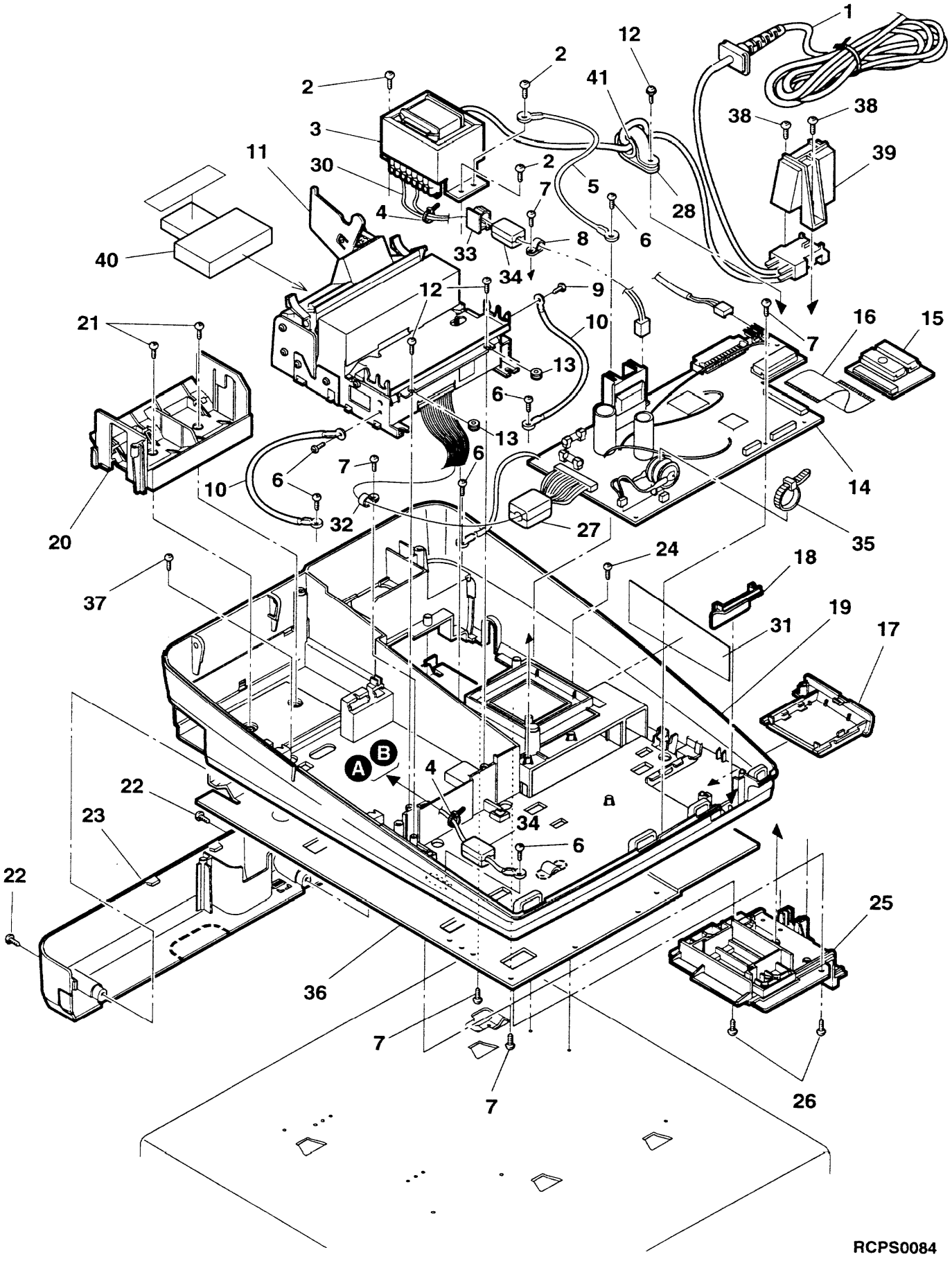

RCPS0084

4 Drawer box unit(SK423 type)

NO.	PARTS CODE	PRICE RANK	NEW MARK	PART RANK	DESCRIPTION	STD DW	SRV OP
2	CCABM7218BH04	BG	N	D	Cabinet Frame unit	○	
	CCABM7172BHZZ	BN		D	Cabinet unit (Top side:flat)		○
3	PGUMM6695BHZZ	AE		D	Stopper gum	○	○
4	NRŌLP6650BHZZ	AP		C	Roller	○	○
5	XUBSD30P08000	AA		C	Screw (3 × 8)	○	○
6	LBRC-6663BHZZ	AQ		C	Bill bracket	○	○
7	MSPRT6714BHZZ	AE		C	Bill spring	○	○
8	MLEVF6695BHZZ	AK		C	Bill lever	○	○
9	PSKR-6629BHZZ	AL		C	Bill separator	○	○
10	SSAKA5004CCZZ	AA		D	Vinyl bag (100 × 300mm)	○	○
11	PSKR-6628BHZZ	AG		C	Separator	○	○
12	GCAS-6678BHZZ	BC		D	Money case (4B/8C)	○	○
13	LX-BZ6776BHZZ	AA		C	Screw	○	○
14	QSW-M6872BHZZ	AR		B	Micro switch	○	○
15	RPLU-6639BHZZ	AZ		B	Plunger	○	
	CPLU-6641BH02	BD		B	Plunger		○
16	CFRM-6683BH01	AW		C	Lock frame unit	○	○
17	LX-BZ6775BHZZ	AA		C	Screw	○	○
18	MSPRT6713BHZZ	AD		C	Open lever spring	○	○
20	XRESJ50-06000	AA		C	E type ring (5mm)	○	○
21	MCAMM6633BHZZ	AG		C	Key cam	○	○
22	LFRM-6682BHZZ	AN		C	Bell frame	○	○
23	XWSSD40-10000	AA		C	Washer (4mm)	○	○
24	XNESD40-32000	AA		C	Nut (M4)	○	○
25	PGUMM6696BHZZ	AE		D	Gum leg	○	○
26	XHBSD30P12000	AA		C	Screw (3 × 12)	○	○
27	MSPRC6712BHZZ	AF		C	Push out spring	○	○
28	NRŌLP6650BHZZ	AP		C	Roller	○	○
29	XNESD60-50000	AA		C	Nut (M6)	○	○
30	XWSSD60-15000	AA		C	Washer (6mm)	○	○
31	GDRW-6678BHZZ	BF		C	Drawer case frame unit	○	○
32	GCŌVA7036BHZZ	AS		D	Front cover	○	○
33	LKGiW7330BHZZ	AY		B	Lock key (Body)	○	○
34	PRNGT6637BHZZ	AA		C	Key ring	○	○
35	LKGiM7331BHZZ	AE		B	Lock key (1pc)	○	○
36	MSPRK6718BHZZ	AF		C	Lock key spring	○	○
37	LPLTM6674BHZC	AY		D	Bottom plate	○	
	LPLTM6674BHZA	AX	N	D	Bottom plate		○
38	SPAKA8255BHZZ	AC		D	Paper pad	○	○
39	XHBSD40P15000	AA		C	Screw (4 × 15)	○	○
40	MSPRB6711BHZZ	AD		C	Earth spring	○	○
41	XHPSC30P08000	AA		C	Screw (3 × 8)	○	○
42	DUNT-1306BHZZ	AX		E	Lock key unit	○	○
43	RALML6647BHZZ	AR		B	Bell		○
44	XBPSD40P06K00	AA		C	Screw (M4 × 6K)		○
45	NSFTM6650BHZZ	AD		C	Bell hammer		○
46	MSPRC6715BHZZ	AE		C	Bell spring		○
47	XBPSD40P06000	AA		C	Screw (M4 × 6)		○
48	LHLDW4081CCZZ	AC		C	Cable holder		○
49	XHPSC30P08000	AA		C	Screw (3 × 8)		○
50	QCNW-7632BHZZ	AQ		C	Earth wire		○
52	SSAKH3012CCZZ	AA		D	Vinyl bag		○
53	XUBSD30P08000	AA		C	Screw (3 × 8)		○
54	RCŌRF6698BHZZ	AR		C	Core		○
55	RCŌRF6699BHZZ	AU		C	Core		○
56	SSAKA5004CCZZ	AA		D	Vinyl bag		○
501	CCAS-6678BH01	BF		E	Money case unit		○
502	GDRW-6678BHZA	BG		E	Drawer case unit	○	○
503	CLŌK-6683BHZB	BK		E	Lock unit (include No.13~18)	○	○
	CLŌK-6683BHZC	BF		E	Lock unit (include No.13~18)		○
504	CFRM-6682BH02	AQ		E	Bell frame unit (include No.22,25~27)	○	
	CFRM-6682BH03	AV	N	E	Bell frame unit (include No.22,25~27,43~47)		○
	(Unit)						
901	GBŌXD7134BHZA	BU	N	E	Drawer box unit	○	
	CBŌXD7136BH01	BU	N	E	Remote drawer box unit		○

NOTE 1: STD : Standard parts
SRV OP : OPtional parts as service route

4 Drawer box unit(SK423 type)

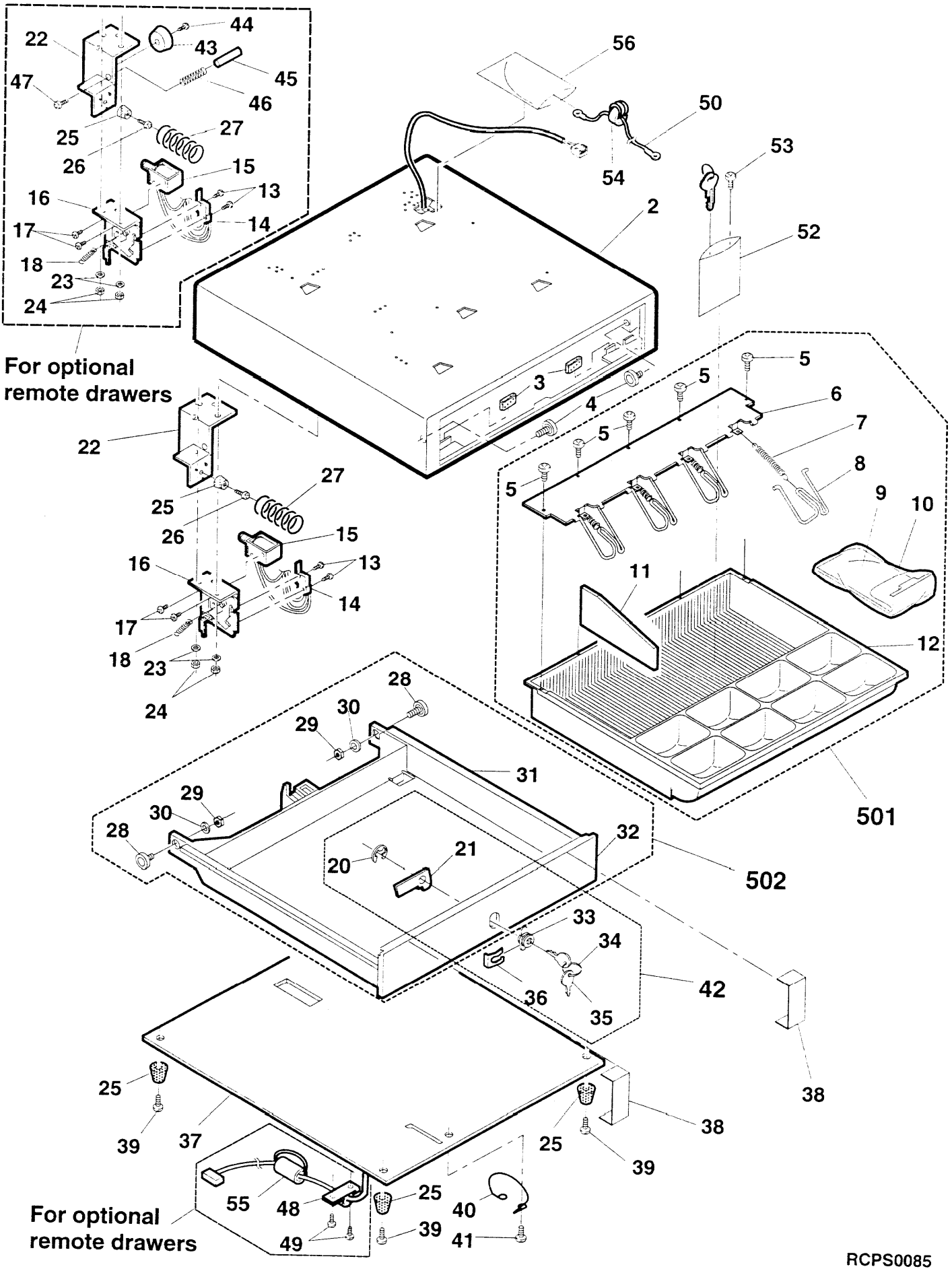

RCPS0085

5 Packing material & Accessories

NO.	PARTS CODE	PRICE RANK	NEW MARK	PART RANK	DESCRIPTION	ER-A460	ER-A470
1	SPAKC8338BHSC	BA	N	D	Packing case	○	
	SPAKC8338BHSA	BA	N	D	Packing case		○
2	SPAKA8337BHZL	AU		D	Packing add L	○	○
3	PSHEP6681BHZZ	AF		D	Packing sheet (1000 × 1000)	○	○
4	SPAKA8337BHZR	AU		D	Packing add R	○	○
5	SSAKH4231CCZZ	AA		D	Vinyl sack (140 × 500)	○	○
6	TiNSE7331BHZZ	AZ	N	D	Instruction book (E) (1)	○	○
	TiNSF7332BHZZ	AZ	N	D	Instruction book (F) (1) [TQ,TR,TS]	○	○
	TiNSG7333BHZZ	AZ	N	D	Instruction book (G) (1) [TQ,TR,TS]	○	○
	TiNSS7334BHZZ	AZ	N	D	Instruction book (S) (1) [TQ,TR,TS]	○	○
7	TiNSE7331BHZA	AX	N	D	Instruction book (E) (2)	○	○
	TiNSF7332BHZA	AX	N	D	Instruction book (F) (2) [TQ,TR,TS]	○	○
	TiNSG7333BHZA	AX	N	D	Instruction book (G) (2) [TQ,TR,TS]	○	○
	TiNSS7334BHZA	AX	N	D	Instruction book (S) (2) [TQ,TR,TS]	○	○
8	SSAKH3015CCZZ	AA		D	Vinyl bag (200 × 300mm)	○	○
9	SSAKH3012CCZZ	AA		D	Vinyl sack (80 × 120)	○	○
10	LKGiM7356BHZZ	AK		B	Printer cover lock key	○	○
11	LKGiM7331BHZZ	AE		B	Lock key(drawer) (1pc)	○	○
12	LKGiM7111BHZZ	AE		B	OP key	○	○
	LKGiM7129BHZZ	AE		B	MA key	○	○
	LKGiM7110BHZZ	AE		B	SM key	○	○
13	TCADH6795BHZZ	AC		D	Caution card (Red)	○	○

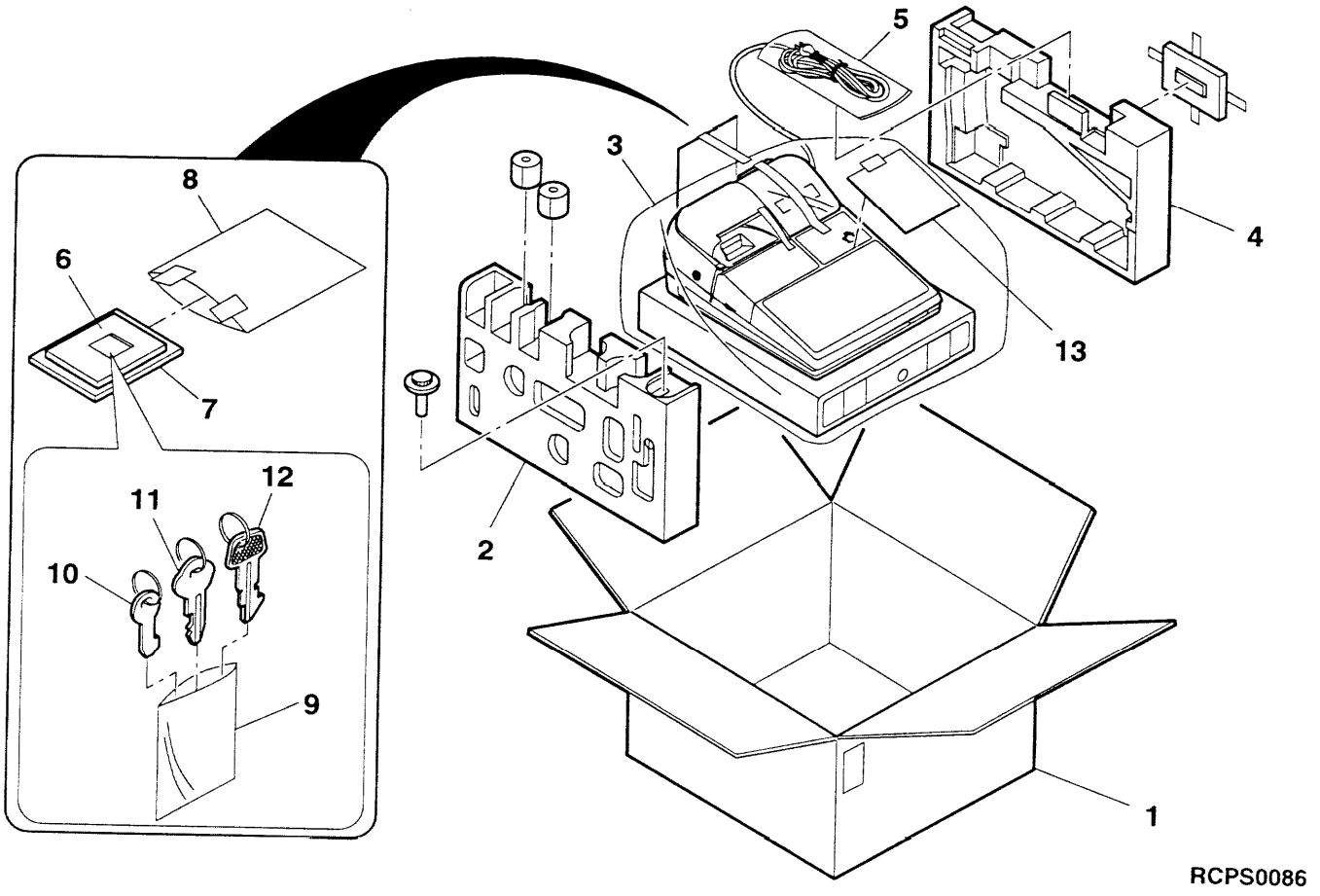

6 Main PWB unit

NO.	PARTS CODE	PRICE RANK	NEW MARK	PART RANK	DESCRIPTION	
1	VHiiR9393N/-1	AD		B	IC (IR9393N)	[IC2]
2	VHiSN74HC00NS	AC		B	IC (GD74HC00)	[IC3]
3	VHiH641510810	BA		B	IC (H641510810)	[IC6]
4	VHiLZ9AH30/-1	BA		B	IC (LZ9AH30)	[IC7]
5	VRD-RC2EY103J	AA		C	Resistor (1/4W 10KΩ ±5%)	[R25,43,44,45,46,50,51,68,70,77,78,80,88,89]
6	VRD-RC2EY102J	AA		C	Resistor (1/4W 1.0KΩ ±5%)	[R48,49,53,54,55,56,74,75,76]
7	VRD-RC2EY473J	AA		C	Resistor (1/4W 47KΩ ±5%)	[R7,72]
8	VRD-RC2EY221J	AA		C	Resistor (1/4W 220Ω ±5%)	[R9]
9	VRD-RC2EY331J	AA		C	Resistor (1/4W 330KΩ ±5%)	[R10,11]
10	VRD-RC2EY202J	AA		C	Resistor (1/4W 2.0KΩ ±5%)	[R13,16]
11	VRD-RC2EY332J	AA		C	Resistor (1/4W 3.3KΩ ±5%)	[R15,62,65,86]
12	VRNRC2EK1303F	AA		C	Resistor (1/4W 130KΩ ±1%)	[R12]
13	VRD-RC2EY623J	AA		C	Resistor (1/4W 62KΩ ±5%)	[R14]
14	VRD-RC2EY222J	AA		C	Resistor (1/4W 2.2KΩ ±5%)	[R59]
15	VRD-RC2EY822G	AA		C	Resistor (1/4W 8.2KΩ ±2%)	[R19]
16	VRD-RC2EY153G	AA		C	Resistor (1/4W 15KΩ ±2%)	[R20]
17	VRD-RC2EY272J	AA		C	Resistor (1/4W 2.7KΩ ±5%)	[R22,24,61,64]
18	VRD-RC2EY912G	AA		C	Resistor (1/4W 9.1KΩ ±2%)	[R21]
19	VRD-RC2EY563J	AA		C	Resistor (1/4W 56KΩ ±5%)	[R23]
20	VRD-RC2EY472J	AA		C	Resistor (1/4W 4.7KΩ ±5%)	[R39,40,41,42,47,73]
21	VRD-RC2EY562J	AA		C	Resistor (1/4W 5.6KΩ ±5%)	[R8,52,60,63,66,69]
22	VRD-RC2EY223J	AA		C	Resistor (1/4W 22KΩ ±5%)	[R92]
23	VRNRC2EK1002F	AA		C	Resistor (1/4W 10KΩ ±1%)	[R37]
24	VRNRC2EK1201F	AA		C	Resistor (1/4W 1.2KΩ ±1%)	[R38]
25	VRD-RC2EY330J	AA		C	Resistor (1/4W 33Ω ±5%)	[R26-36]
26	VRD-RC2EY273J	AA		C	Resistor (1/4W 27KΩ ±5%)	[R93]
27	VHDDSS133HV-1	AA		B	Diode (DSS133HV)	[D6,8]
28	VHDEU1Z////-1	AB		B	Diode (EU1Z)	[D2,3]
29	VHD1N4002G/-1	AA		B	Diode (1N4002G)	[D1,4,5]
30	VHERD6.2EB2-1	AB		B	Zener diode (RD6.2EB2)	[ZD1]
31	VHEMTZ5.6A/-1	AA		B	Zener diode (MTZ5.6A)	[ZD2]
32	VHEMTZ5.1A/-1	AC		B	Zener diode (MTZ5.1A)	[ZD5]
33	VHEE102////-1	AC		B	Zener diode (E102)	[ZD3]
34	RCŌRF6671BHZZ	AK		C	Core	[FB1,2]
35	VRD-RC2EY470J	AA		C	Resistor (1/4W 47Ω ±5%)	[R79]
36	VRD-RC2EY000J	AA		C	Resistor (1/4W 0Ω ±5%)	[C59]
37	VSDSC001-B/-1	AA		B	Transistor (DSC001-B) (KTC3198GR)	[Q3,4,7,8,9,113]
38	VS2SA673-//-1	AD		B	Transistor (2SA673) (KTA1270Y)	[Q6]
39	VCEAGA1HW107M	AA		C	Capacitor (50WV 100μF)	[C5]
40	VCEAGA1CW477M	AB		C	Capacitor (16WV 470μF)	[C1]
41	VCEAGA1CW337M	AB		C	Capacitor (16WV 330μF)	[C13]
42	VCEAGA1CW107M	AC		C	Capacitor (16WV 100μF)	[C12]
43	VCEAGA1HW106M	AA		C	Capacitor (50WV 10μF)	[C8]
44	VCEAGA1HW335M	AB		C	Capacitor (50WV 3.3μF)	[C9]
45	VCEAGA1HW105M	AB		C	Capacitor (50WV 1μF)	[C15]
46	RC-KZ1054CCZZ	AB		C	Capacitor (50WV 0.1μF)	[C17,19,90,91,92,95,97]
47	RC-EZ106ARC1A	AD		C	Capacitor (10WV 10μF)	[C18,20,93,96]
48	RC-EZ476ARC1A	AF		C	Capacitor (10WV 47μF)	[C94]
49	VCKYPU1HB102K	AA		C	Capacitor (50WV 1000PF)	[C16,21,22,82,83,85,86,88,191]
50	VCQYNA1HM103K	AA		C	Capacitor (50WV 0.010μF)	[C14,69,84]
51	VCKYPU1HB331K	AA		C	Capacitor (50WV 330pF)	[C23,25-26,60-62,64-68,74-80]
52	VCKYPU1HB101K	AA		C	Capacitor (50WV 100PF)	[C57,58,81]
53	VCKYPU1HB471K	AA		C	Capacitor (50WV 470PF)	[C98,99,100,101,102]
54	VCQYNA1HM333K	AA		C	Capacitor (50WV 0.033μF)	[C1]
55	VCQYNU1HM104K	AB		C	Capacitor (50WV 0.10μF)	[C87]
56	QFSHD2109AFZZ	AC		C	Fuse holder (HD2109AF)	
57	VCEAGA1HW476M	AB		C	Capacitor (40WV 47μF)	[C10]
58	VCKYPU1HB332K	AA		C	Capacitor (50WV 3300pF)	[C7]
59	VCCSPU1HL470J	AA		C	Capacitor (50WV 47pF)	[C63]
60	RVR-M2517BHZZ	AL		B	Variable resistor (200K)	[VR1]
61	RMPTC8103QCKB	AD		B	Block resistor (10KΩ × 8 1/8W ±10%)	[RA1,2,3,4]
62	RMPTC8102QCKB	AD		B	Block resistor (1.0KΩ × 8 1/8W ±10%)	[RA9]
63	RMPTC6103QCKB	AC		B	Block resistor (10KΩ × 6 1/8W ±10%)	[RA5,6,7,8]
64	VHi27020RAU1A	BD	N	B	IC (27020RAU1A)	[IC4]
65	VHiSTR2024/-1	AR		B	IC (STR2024)	[IC1]
66	VHiHM62256L15	BR		B	IC (HM62256L15)	[IC5]
67	QSŌCZ2042SC32	AE		C	IC socket (32pin)	[IC4]
68	VHiSTA401A/-1	AP		B	IC (STA401)	[IC8,9]
69	VHiM54567P/-1	AK		B	IC (M54567P)	[IC10]
70	PRDAF6654BHZZ	AM		C	Heat sink	[(IC1)]
71	XBPSD30P10000	AA		C	Screw (M3 × 10)	[(IC1)]
72	LX-BZ6644BHZZ	AA		C	Screw (M3.5 × 8S)	[(IC1)]
73	VHERD4.3EL1-1	AA		B	Zener diode (RD4.3EL1)	[ZD4]
74	VHDCP301///-1	AL		B	Diode (CP301)	[DB1]
75	VS2SC4153-/-1	AG		B	Transistor (2SC4153)	[Q2]
76	VCEAGA1HW228M	AB		C	Capacitor (50WV 2200μF)	[C4]
77	VCEAGU1HW478M	AL		C	Capacitor (50WV 4700μF)	[C2]
⚠ 78	QFS-C2521TAZZ	AE		A	Fuse (T2.5AL/250V)	[F1]
⚠ 79	QFS-C4301CCZZ	AE		A	Fuse (T800mA/250V)	[F2]
⚠ 80	RTRNH6882RCZZ	AM		B	Converter transformer	[T1]

6 Main PWB unit

NO.	PARTS CODE	PRICE RANK	NEW MARK	PART RANK	DESCRIPTION	
81	RCiLC6653BHZZ	AS		C	Coil (180μH)	[L1]
82	RCRSZ6674RCZZ	AG		B	Ceramic resonator (14.7MHz)	[X2]
83	QCNCM1101CCZZ	AB		C	Connector (2pin) (5273-02A)	[CN1]
84	QCNCM5278NCZZ	AC		B	Connector (3pin) (5046-03A)	[DRCN1,2]
85	PRDAF6656BHZZ	AK		C	Heat sink	[(Q2)]
86	QCNCM6865RC0B	AA		B	Connector (2pin) (5267-02A)	[CN13(NEJ)]
87	QCNCM7073RC6H	AM		C	Connector (68pin)	[CN7]
88	QCNCM7176BH0G	AD		C	Connector (53014-0710)	[CN9]
89	QCNCM7176BH1J	AD		C	Connector (53014-1010)	[CN10]
90	QCNCM7176BH0E	AC		C	Connector (53014-0510)	[CN15]
91	QCNCM7178BH3F	AL		C	Connector (52044-3610)	[CN11]
92	QCNW-7750BHZZ	BA		C	Printer cable (30P)	[CN12]
93	XBPSD30P06000	AA		C	Screw (M3 × 6)	[(Q2)]
94	VCQYNA1HM224K	AC		C	Capacitor (50WV 0.22μF)	[C105]
95	VRD-RC2EY103J	AA		C	Resistor (1/4W 10KΩ ±5%)	
96	VCKYPU1HB331K	AA		C	Capacitor (50WV 330pF)	
97	QCNW-7765BHZZ	AE		C	GND wire	[GND2]
98	QCNW-7766BHZZ	AE		C	GND wire	[GND4~6,7~9]
99	QCNW-7697BHZZ	AD		C	GND wire	[GND8~5]
100	VCKYPU1HB331K	AA		C	Capacitor (50WV 330pF)	[C24,70~73]
101	RC-KZ1054CCZZ	AB		C	Capacitor (0.1μF)	
102	UBATN6639BHZZ	BC		B	Battery (170MA 2.4V)	
	(Unit)					
901	CPWBN7457BH02	CC	N	E	Main PWB unit	

7 Key I/F PWB unit

NO.	PARTS CODE	PRICE RANK	NEW MARK	PART RANK	DESCRIPTION		ER-A460	ER-A470
1	VRD-RC2EY473J	AA		C	Resistor (1/4W 47KΩ ±5%)	[R1,2,3,4,5,6,7,8,9,10]	○	○
2	VHDDSS133HV-1	AA		B	Diode (DSS133HV)	[D1~22,24]	○	
	VHDDSS133HV-1	AA		B	Diode (DSS133HV)	[D1~22]		○
3	RC-Z1N104BHZZ	AC		C	Capacitor (12WV 0.1μF)	[C1,2,3,4]	○	○
4	RMPTC8473QCKB	AC		B	Block resistor (47KΩ × 8 1/8W ±10%)	[RA1]	○	○
5	VHiSN74LS138N	AG		B	IC (SN74LS138N)	[IC1,2]	○	○
6	VHiT74HC153-C	AN		B	IC (74HC153P)	[IC3,4]	○	○
7	QCNCM6865BH1A	AE		C	Connector (Mode S/W) (5267-11A)	[CN2]	○	○
8	QCNW-7748BHZZ	AM		C	Cable (Key I/F~ Display) (10P)	[CN4]	○	○
9	QCNW-7747BHZZ	AM		C	Cable (Key I/F~ Display) (9P)	[CN3]	○	○
10	QCNCW7118BH1H	AM		C	Connector (18pin) (K/B) (5229-18CPB)	[CN5]	○	○
11	QCNCM7118BH0i	AF		C	Connector (9pin) (K/B) (5229-09CPB)	[CN6]	○	○
12	QCNW-7769BHZZ	AE		C	GND wire		○	○
13	QCNCM7168BH0C	AE	N	C	Connector (W-P9003 #50)	[CN1]	○	○
14	QCNCM7169BH0C	AF	N	C	Connector (CLP2503-0101)	[CN8]	○	○
	(Unit)							
901	CPWBF7455BH03	BE	N	E	Key PWB unit (Normal)		○	
	CPWBF7455BH04	BE	N	E	Key PWB unit (Flat)			○

8 Display PWB unit

NO.	PARTS CODE	PRICE RANK	NEW MARK	PART RANK	DESCRIPTION	
1	VRD-RC2EY000J	AA		C	Resistor (1/4W 0Ω ±5%)	[FL1,2]
2	VRD-RC2EY473J	AA		C	Resistor (1/4W 47KΩ ±5%)	[R1,2]
3	VRD-RC2EY472J	AA		C	Resistor (1/4W 4.7KΩ ±5%)	[R3,4]
4	VRD-RC2EY202J	AA		C	Resistor (1/4W 2.0KΩ ±5%)	[R9,10,11,12,13,14,17,18,19,20]
5	VRD-RC2EY330J	AA		C	Resistor (1/4W 33Ω ±5%)	[R5,6,7,8]
6	VRD-RC2EY221J	AA		C	Resistor (1/4W 220Ω ±5%)	[R21]
7	VRD-RC2EY105J	AA		C	Resistor (1/4W 1.0MΩ ±5%)	[R22]
8	VRD-RC2EY273G	AA		C	Resistor (1/4W 27KΩ ±2%)	[R0]
9	VHEMTZJ39C/-1	AB		B	Zener diode (MTZJ39C)	[ZD1]
10	VRD-RC2EY3R3J	AA		C	Resistor (1/4W 3.3Ω ±5%)	[R15,16]
11	VRD-RC2EY222J	AA		C	Resistor (1/4W 2.2KΩ ±5%)	[R24]
12	VRD-RC2EY123J	AA		C	Resistor (1/4W 12KΩ ±5%)	[R23]
13	VHDDSS133HV-1	AA		B	Diode (DSS133HV)	[D2]
14	RC-KZ1054CCZZ	AB		C	Capacitor (50WV 0.1μF)	[C3,4,6,13,21,22]
15	RC-EZ106ARC1A	AD		C	Capacitor (10WV 10μF)	[C8,20]
16	VCCCPU1HH150J	AA		C	Capacitor (50WV 15PF)	[C14,15]
17	VCEAEU1CW106M	AA		C	Capacitor (16WV 10μF)	[C7]
18	VCKYPU1HB102K	AA		C	Capacitor (50WV 1000PF)	[C2,19]
19	VCKYPU1HB471K	AA		C	Capacitor (50WV 470PF)	[C0,1,9,11,12,16,17,18]
20	VCKYPU1HB101K	AA		C	Capacitor (50WV 100PF)	[C23]
21	VCKYPU1HB222K	AA		C	Capacitor (50WV 2200PF)	[C10]
22	VSDSC001-B/CC	AA		B	Transistor (DSC001-B/CC) (2SC3198)	[Q1]

8 Display PWB unit

NO.	PARTS CODE	PRICE RANK	NEW MARK	PART RANK	DESCRIPTION	
23	VHiH4728A91FS	AX		B	IC (H4728A91FS)	[IC1]
24	VHiM66004FP-1	AY		B	IC (M66004FP)	[IC2]
25	RCRSZ6644RCZZ	AD		B	Crystal (4.19MHz)	[X1]
26	RCRSP1003CCZZ	AT		B	Crystal (32KHz)	[X2]
27	RMPTC4104QCKB	AC		B	Block resistor (100KΩ × 4 1/8W ±10%)	[RA3]
28	RMPTC7104QCKB	AC		B	Block resistor (100KΩ × 7 1/4W ±10%)	[RA2]
29	RMPTC8104QCKB	AD		B	Block resistor (100KΩ × 8 1/8W ±10%)	[RA1]
30	RMPTE4471RCHZ	AD		B	Capacitor array (470pF × 4)	[CA1]
31	QCNW-7751BHZZ	AV		C	Cable (DISP-MAIN)	[CN6,7]
32	QCNCM7176BH0H	AD		C	Connector (KEY) (5394-0810)	[CN3]
33	QCNCM7176BH0i	AD		C	Connector (KEY) (53014-0910)	[CN4]
34	QCNCM6865RC0H	AC		C	Connector (Pop up) (5267-08A)	[CN1]
35	QCNCM6865RC1J	AC		C	Connector (10pin)	[CN2]
36	RALMB6646BHZZ	AQ		B	Buzzer	[BZ]
37	VVK22MT03G/-1	BM		B	Display tube	
38	LBNDJ2003SCZZ	AA		C	Cable band (Large)	
	(Unit)					
901	CPWBN7459BH01	BW		E	Display PWB unit	

9 IR PWB unit

NO.	PARTS CODE	PRICE RANK	NEW MARK	PART RANK	DESCRIPTION	
1	VCCCCY1HH101J	AA		C	Capacitor (50WV 100PF)	[C46]
2	VCCCTV1HH200J	AA		C	Capacitor (50WV 20PF)	[C49,61]
3	VCKYCY1HB102K	AA		C	Capacitor (50WV 1000PF)	[C47]
4	VCKYTV1HB103K	AB		C	Capacitor (50WV 0.010μF)	[C44]
5	VCKYCY1HB222K	AA		C	Capacitor (50WV 2200PF)	[C48]
6	VCKYCY1HF104Z	AA		C	Capacitor (50WV 0.10μF)	[C45,50,51,52]
7	VHiiR9393N/-1	AD		B	IC (IR9393N)	[IC1]
8	VRD-RB2HY150J	AA		C	Resistor (1/2W 15Ω ±5%)	[R71]
9	VRS-TS2AD101J	AA		C	Resistor (1/10W 100Ω ±5%)	[R68,69]
10	VRS-TS2AD102J	AA		C	Resistor (1/10W 1.0KΩ ±5%)	[R72]
11	VRS-TS2AD103J	AA		C	Resistor (1/10W 10KΩ ±5%)	[R56,61,62]
12	VRS-TS2AD104J	AA		C	Resistor (1/10W 100KΩ ±5%)	[R51]
13	VRS-TS2AD110J	AA		C	Resistor (1/10W 11Ω ±5%)	[R70]
14	VRS-TS2AD182J	AA		C	Resistor (1/10W 1.8KΩ ±5%)	[R52]
15	VRS-TS2AD223J	AA		C	Resistor (1/10W 22KΩ ±5%)	[R55]
16	VRS-TS2AD332J	AA		C	Resistor (1/10W 3.3KΩ ±5%)	[R50,67]
17	VRS-TS2AD333J	AA		C	Resistor (1/10W 33KΩ ±5%)	[R66,54]
18	VRS-TS2AD363J	AA		C	Resistor (1/10W 36KΩ ±5%)	[R58]
19	VRS-TS2AD393G	AA		C	Resistor (1/10W 39KΩ ±2%)	[R63]
20	VRS-TS2AD393J	AA		C	Resistor (1/10W 39KΩ ±5%)	[R57]
21	VRS-TS2AD432J	AA		C	Resistor (1/10W 4.3KΩ ±5%)	[R60]
22	VRS-TS2AD622J	AA		C	Resistor (1/10W 6.2KΩ ±5%)	[R59]
23	VRS-TS2AD623G	AB		C	Resistor (1/10W 62KΩ ±2%)	[R65]
24	VS2SC4405-/-1	AD		B	Transistor (2SC4405)	[Q3]
25	VSUMX5/////-1	AC		B	Transistor (UMX5)	[Q1,2]
26	VRS-TS2AD821J	AA		C	Resistor (1/10W 820Ω ±5%)	[R64]
27	VRS-TS2AD563J	AA		C	Resistor (1/10W 56KΩ ±5%)	[R53]
28	VHPPD410Pi/-1	AE		B	Photo transistor (PD410PI)	[PD1]
29	VHPSiR320ST3N	AD		B	LED (SIR320ST3N)	[LED1,2]
30	QCNCM7179BH0E	AD		C	Connector (5P) (53015-0510)	[CN1]
31	LHLDZ6835BHZZ	AL		C	LED housing	
32	PSPAG6730BHZZ	AE		C	Photo diode cushion	
33	PSLDM6638BHZZ	AG		C	IR PWB shield case	
34	PSLDM6637BHZZ	AG		C	Photo diode case	
35	RC-EZ106ARC1A	AD		C	Capacitor (10WV 10μF)	[C54]
	(Unit)					
901	CPWBN7460BH01	BB		E	IR PWB unit	

10 Pop-up PWB unit

NO.	PARTS CODE	PRICE RANK	NEW MARK	PART RANK	DESCRIPTION
1	QCNCW7083BH08	AM		C	Connector (8pin) [CN1]
2	QCNCW7083BH10	AP		C	Connector (10pin) [CN2]
3	VVK7MT143G/-1	AX		B	Display tube
4	LBNDJ2003SCZZ	AA		C	Cable band (Large)
	(Unit)				
901	CPWBF7456BH01	BG		E	Pop up PWB unit

11 ROM/RAM PWB unit

NO.	PARTS CODE	PRICE RANK	NEW MARK	PART RANK	DESCRIPTION
1	QCNCM7178BH3D	AM		C	Connector (52044-3410) [CN201]
2	QSÕCZ2042SC32	AE		C	IC socket (32pin) [IC101,102]
3	RC-EZ106ARC1A	AD		C	Capacitor (10μ 10V) [C202,204]
4	RC-KZ1054CCZZ	AB		C	Capacitor (0.1μF 12V) [C201,203]
	(Unit)				
901	CPWBN7458BH01	BK		E	ROM/RAM PWB unit

12 Articles for consumption

NO.	PARTS CODE	PRICE RANK	NEW MARK	PART RANK	DESCRIPTION	ER-A460	ER-A470
1	DPAPR1026CSZZ	AR		S	Roll paper (5 rolls/pack)	○	○
2	PRBN-6644RCZZ	AZ		S	Ink ribbon	○	○
3	PSHEK6830BHZZ	AU	N	S	Programing character sheet		○
	PSHEK6829BHZZ	AR	N	S	Standard character sheet		○
	PSHEK6828BHZZ	AK		S	Blank character sheet		○

13 Service route options & Service tools

NO.	PARTS CODE	PRICE RANK	NEW MARK	PART RANK	DESCRIPTION	ER-A460	ER-A470
1	LKGiM7113RCZZ	AK		S	Service key	○	○
2	GCÕVB7108BHZZ	BA	N	S	SW cover	○	○
3	LKGiM7126RCZZ	AL		S	Mode key grip cover	○	○
4	GCÕVB7109BHZZ	BF	N	S	Normal key cover	○	
5	DUNT-4945BHZZ	AY		S	Near end senser unit (Include No.101~108)	○	○
6	GCÕVB7110BHZA	BE	N	S	Key cover(Programing)	○	
7	CBÕXD7136BH01	BU	N	S	Remote drawer box unit	○	○
8	GCÕVA7107BHZB	AG	N	S	Clerk cover B (for ER-A5CL)	○	○
9	LANGT7581BHZZ	AM	N	S	Clerk angle (for ER-A5CL)	○	○
10	CKÕG-6708RCZZ	BU		S	Expansion PWB	○	○
11	UKÕG-6705RCZZ	BC		S	RS232 loop back connector (for ER-A5RS)	○	○
12	UKÕG-6634RCZZ	AX		S	Key top remover	○	○
101	QSW-M6887BHZZ	AV		B	END switch	○	○
102	LPLTM6690BHZZ	AF		C	End S/W holder	○	○
103	MLEVF6706BHZZ	AF		C	End S/W lever	○	○
104	MSPRC6736RCZZ	AC		C	Sensor spring	○	○
105	LANGK7547BHZZ	AL		C	N/F angle	○	○
106	XBPSD20P08000	AA		C	Screw (M2 × 8)	○	○
107	XBPSD40P04000	AA		C	Screw (M4 × 4)	○	○
108	QCNW-7774BHZZ	AE		C	End SW cable		

Index

PARTS CODE	NO.	PRICE RANK	NEW MARK	PART RANK
【C】				
CBŌXD7136BH01	4-901	BU	N	E
CCABM7172BHZZ	4- 2	BN		D
CCABM7218BH04	4- 2	BG	N	D
CCAS-6678BH01	4-501	BF		E
CFRM-6682BH02	4-504	AQ		E
CFRM-6682BH03	4-504	AV	N	E
CFRM-6683BH01	4- 16	AW		C
CLŌK-6683BHZB	4-503	BK		E
CLŌK-6683BHZC	4-503	BF		E
CPLU-6641BH02	4- 15	BD		B
CPWBF7455BH03	1- 27	BE	N	E
CPWBF7455BH04	2- 27	BE	N	E
CPWBF7456BH01	1- 6	BG		E
〃	2- 6	BG		E
〃	10-901	BG		E
CPWBN7457BH02	3- 14	CC	N	E
〃	6-901	CC	N	E
CPWBN7458BH01	3- 15	BK		E
〃	11-901	BK		E
CPWBN7459BH01	1- 20	BW		E
〃	2- 20	BW		E
〃	8-901	BW		E
CPWBN7460BH01	1- 4	BB		E
〃	2- 4	BB		E
〃	9-901	BB		E
CSHEP6833BH01	1- 45	BA		C
【D】				
DUNT-1306BHZZ	4- 42	AX		E
DUNT-1817BHZZ	1- 15	AY		E
〃	2- 15	AY		E
DUNTK4938RCZZ	2- 41	BE		E
DUNTK4939BHZZ	1-501	BR	N	E
【G】				
GBŌXD7134BHZA	4-901	BU	N	E
GCAB-7215BHZZ	1- 2	AR		D
〃	2- 2	AR		D
GCABA7216BHZA	3- 19	BH	N	D
GCABB7214BHZZ	2- 9	BC		D
GCABB7217BHZZ	1- 9	BC		D
GCAS-6678BHZZ	4- 12	BC		D
GCŌVA7036BHZZ	4- 32	AS		D
GCŌVA7100BHZZ	1- 13	AY		D
〃	2- 13	AY		D
GCŌVA7103BHZZ	1- 16	AT		D
〃	2- 16	AT		D
GCŌVA7104BHZZ	3- 23	AV		D
GCŌVA7105BHZZ	3- 17	AU		D
GCŌVA7107BHZA	3- 18	AL		D
GCŌVB7101BHZZ	2- 36	BF		D
GCŌVB7102BHZZ	2- 40	BA		D
GCŌVH7106BHZZ	3- 25	AU		D
GDRW-6678BHZA	4-502	BG		E
GDRW-6678BHZZ	4- 31	BF		C
【H】				
HPNLC6826BHZZ	2- 10	AP	N	D
HPNLC6828BHZZ	1- 10	AP	N	D
【J】				
JKNBZ6896BHZZ	1- 40	AG		C
JKNBZ6897BHZZ	1- 39	AG		C
JKNBZ6898BHZZ	1- 37	AH		C
JKNBZ6899BHZZ	1- 36	AH		C
JKNBZ6907BHZZ	1- 38	AK		C
JKNBZ6908BHZZ	1- 38	AK		C
JKNBZ6909BHZZ	1- 38	AK		C
JKNBZ6910BHZZ	1- 38	AL		C
JKNBZ6911BHZZ	1- 38	AK		C
JKNBZ6912BHZZ	1- 38	AK		C
JKNBZ6913BHZZ	1- 38	AK		C
JKNBZ6914BHZZ	1- 38	AK		C
JKNBZ6915BHZZ	1- 38	AK		C
JKNBZ6916BHZZ	1- 38	AK		C
JKNBZ6917BHZZ	1- 38	AK		C
JKNBZ6918BHZZ	1- 38	AK		C
JKNBZ6919BHZZ	1- 38	AK		C
JKNBZ6920BHZZ	1- 38	AK		C
【K】				
Ki-ŌB6778RCZZ	3- 11	BY		E
【L】				
LANGT7582BHZZ	1- 31	AL		C

PARTS CODE	NO.	PRICE RANK	NEW MARK	PART RANK
LANGT7582BHZZ	2- 31	AL		C
LANGT7583BHZZ	1- 19	AS		C
〃	2- 19	AS		C
LBNDJ2003SCZZ	1- 5	AA		C
〃	2- 5	AA		C
〃	3- 4	AA		C
〃	8- 38	AA		C
〃	10- 4	AA		C
LBNDJ2004BHZZ	3- 35	AB		C
LBNDJ6636BHZZ	3- 28	AD		C
LBRC-6663BHZZ	4- 6	AQ		C
LCHSM6704BHZZ	3- 36	AY	N	C
LFRM-6682BHZZ	4- 22	AN		C
LFRM-6697BHZZ	1- 42	BA		C
LHLDQ6839BHZZ	3- 39	AL	N	C
LHLDW0006SCZZ	3- 8	AB		C
LHLDW0008SCZZ	1- 17	AA		C
〃	2- 17	AA		C
〃	3- 32	AA		C
LHLDW4081CCZZ	4- 48	AC		C
LHLDW6820BHZZ	1- 24	AE		C
〃	2- 24	AE		C
LHLDW6821BHZZ	1- 25	AD		C
〃	2- 25	AD		C
〃	3- 33	AD		C
LHLDZ6835BHZZ	9- 31	AL		C
LHLDZ6836BHZZ	1- 50	AE		C
LHLDZ6837BHZZ	1- 51	AE		C
LHLDZ6838BHZZ	2- 42	AD		C
LKGiM7110BHZZ	1- 28	AE		B
〃	2- 28	AE		B
LKGiM7111BHZZ	1- 28	AE		B
〃	2- 28	AE		B
LKGiM7129BHZZ	1- 28	AE		B
〃	2- 28	AE		B
LKGiM7331BHZZ	4- 35	AE		B
LKGiM7356BHZZ	1- 14	AK		B
〃	2- 14	AK		B
LKGiW0001BHZZ	1- 29	AS		B
〃	2- 29	AS		B
LKGiW7330BHZZ	4- 33	AY		B
LPLTM6674BHZA	4- 37	AX	N	D
LPLTM6674BHZC	4- 37	AY		D
LPLTM6698BHZZ	1- 44	AV		C
LPLTP6697BHZZ	3- 20	AP		C
LX-BZ1085CCZZ	3- 21	AA		C
LX-BZ6644BHZZ	6- 72	AA		C
LX-BZ6775BHZZ	4- 17	AA		C
LX-BZ6776BHZZ	4- 13	AA		C
LX-BZ6782BHZZ	1- 21	AA		C
〃	2- 21	AA		C
〃	3- 24	AA		C
【M】				
MCAMM6633BHZZ	4- 21	AG		C
MLEVF6695BHZZ	4- 8	AK		C
MSPRB6711BHZZ	4- 40	AD		C
MSPRC6712BHZZ	4- 27	AF		C
MSPRC6715BHZZ	4- 46	AE		C
MSPRK6718BHZZ	4- 36	AF		C
MSPRT6713BHZZ	4- 18	AD		C
MSPRT6714BHZZ	4- 7	AE		C
【N】				
NRŌLP6650BHZZ	4- 4	AP		C
〃	4- 28	AP		C
NSFTM6650BHZZ	4- 45	AD		C
【P】				
PFiLW6942BHZZ	1- 1	AQ		D
〃	2- 1	AQ		D
PFiLW6943BHZZ	1- 3	AS	N	D
〃	2- 3	AS	N	D
PFiLW6950BHZZ	1- 7	AW	N	D
〃	2- 7	AW	N	D
PFiLW6951BHZZ	1- 12	AS		C
〃	2- 12	AS		C
PGUMM6695BHZZ	4- 3	AE		D
PGUMM6696BHZZ	4- 25	AE		D
PGUMM6699RCZZ	3- 13	AB		C
PGUMM6724BHZZ	1- 43	AY		C
PRDAF6654BHZZ	6- 70	AM		C
PRDAF6656BHZZ	6- 85	AK		C

PARTS CODE	NO.	PRICE RANK	NEW MARK	PART RANK
PRNGT6637BHZZ	4- 34	AA		C
PRNGT6639BHZZ	1- 34	AB		C
〃	2- 34	AB		C
PSHEK6828BHZZ	2- 39	AK		D
PSHEK6829BHZZ	2- 37	AR	N	D
PSHEK6830BHZZ	2- 38	AU	N	D
PSHEP6839BHZZ	1- 46	AC		C
〃	2- 46	AC		C
PSHEP6840BHZZ	2- 43	AE		C
PSKR-6628BHZZ	4- 11	AG		C
PSKR-6629BHZZ	4- 9	AL		C
PSLDM6637BHZZ	1- 52	AG		C
〃	2- 47	AG		C
〃	9- 34	AG		C
PSLDM6638BHZZ	1- 54	AG		C
〃	2- 49	AG		C
〃	9- 33	AG		C
PSPAG6730BHZZ	1- 53	AE		C
〃	2- 48	AE		C
〃	9- 32	AE		C
PSTM-6793RCZZ	3- 40	AU	N	C
PSTM-6798RCZZ	3- 40	AV	N	C
【Q】				
QACCE3120QCN5	3- 1	AL		B
QACCL1018CCN1	3- 1	AV		B
QCNCM1101CCZZ	6- 83	AB		C
QCNCM5278NCZZ	6- 84	AC		B
QCNCM6865RC0B	6- 86	AA		B
QCNCM6865RC0H	8- 34	AC		C
QCNCM6865RC1J	8- 35	AC		C
QCNCM7073RC6H	6- 87	AM		C
QCNCM7176BH0E	6- 90	AC		C
QCNCM7176BH0G	6- 88	AD		C
QCNCM7176BH0H	8- 32	AD		C
QCNCM7176BH0i	8- 33	AD		C
QCNCM7176BH1J	6- 89	AD		C
QCNCM7178BH3D	11- 1	AM		C
QCNCM7178BH3F	6- 91	AL		C
QCNCM7179BH0E	9- 30	AD		C
QCNCW7083BH08	10- 1	AM		C
QCNCW7083BH10	10- 2	AP		C
QCNW-1035CCZZ	3- 1	AL		B
QCNW-7632BHZZ	4- 50	AQ		C
QCNW-7697BHZZ	6- 99	AD		C
QCNW-7749BHZZ	3- 16	AP		C
QCNW-7750BHZZ	6- 92	BA		C
QCNW-7751BHZZ	8- 31	AV		C
QCNW-7752BHZZ	3- 30	AH		C
QCNW-7753BHZZ	1- 33	AP		C
〃	2- 33	AP		C
QCNW-7754BHZZ	1- 30	AP		C
〃	2- 30	AP		C
QCNW-7764BHZZ	3- 10	AK		C
QCNW-7765BHZZ	6- 97	AE		C
QCNW-7766BHZZ	6- 98	AE		C
QCNW-7768BHZZ	3- 5	AE		C
QCNW-7770BHZZ	1- 48	AE		C
〃	2- 45	AE		C
QCNW-7771BHZZ	1- 47	AF		C
〃	2- 44	AF		C
QFS-C2521TAZZ	6- 78	AE		A
QFS-C4301CCZZ	6- 79	AE		A
QFSHD2109AFZZ	6- 56	AC		C
QPLGA0006QCZZ	3- 1	AQ		C
QSŌCZ2042SC32	6- 67	AE		C
〃	11- 2	AE		C
QSW-M6872BHZZ	4- 14	AR		B
【R】				
RALMB6646BHZZ	8- 36	AQ		B
RALML6647BHZZ	4- 43	AR		B
RC-EZ106ARC1A	6- 47	AD		C
〃	8- 15	AD		C
〃	9- 35	AD		C
〃	11- 3	AD		C
RC-EZ476ARC1A	6- 48	AF		C
RC-KZ1054CCZZ	6- 46	AB		C
〃	6-101	AB		C
〃	8- 14	AB		C
〃	11- 4	AB		C
RCiLC6653BHZZ	6- 81	AS		C

PARTS CODE	NO.	PRICE RANK	NEW MARK	PART RANK
RCŌRF6671BHZZ	6- 34	AK		C
RCŌRF6696BHZZ	3- 41	AL	N	C
RCŌRF6698BHZZ	4- 54	AR		C
RCŌRF6699BHZZ	1- 23	AU		C
〃	2- 23	AU		C
〃	3- 27	AU		C
〃	4- 55	AU		C
RCŌRF6700BHZZ	3- 34	AS		C
RCRSP1003CCZZ	8- 26	AT		B
RCRSZ6644RCZZ	8- 25	AD		B
RCRSZ6674RCZZ	6- 82	AG		B
RMPTC4104QCKB	8- 27	AC		B
RMPTC6103QCKB	6- 63	AC		B
RMPTC7104QCKB	8- 28	AC		B
RMPTC8102QCKB	6- 62	AD		B
RMPTC8103QCKB	6- 61	AD		B
RMPTC8104QCKB	8- 29	AD		B
RMPTE4471RCHZ	8- 30	AD		B
RPLU-6639BHZZ	4- 15	AZ		B
RTRNH6882RCZZ	6- 80	AM		B
RTRNP6880BHZZ	3- 3	BE	N	B
RTRNP6881BHZZ	3- 3	BE	N	B
RVR-M2517BHZZ	6- 60	AL		B
【S】				
SPAKA8255BHZZ	4- 38	AC		D
SSAKA5004CCZZ	4- 10	AA		D
〃	4- 56	AA		D
SSAKH3012CCZZ	4- 52	AA		D
【T】				
TCAUS6677BHZZ	3- 31	AD		D
TLABH7001BHZZ	1-101	AV	N	D
【U】				
UBATN6639BHZZ	6-102	BC		B
【V】				
VCCCCY1HH101J	9- 1	AA		C
VCCCPU1HH150J	8- 16	AA		C
VCCCTV1HH200J	9- 2	AA		C
VCCSPU1HL470J	6- 59	AA		C
VCEAEU1CW106M	8- 17	AA		C
VCEAGA1CW107M	6- 42	AC		C
VCEAGA1CW337M	6- 41	AB		C
VCEAGA1CW477M	6- 40	AB		C
VCEAGA1HW105M	6- 45	AB		C
VCEAGA1HW106M	6- 43	AA		C
VCEAGA1HW107M	6- 39	AA		C
VCEAGA1HW228M	6- 76	AB		C
VCEAGA1HW335M	6- 44	AB		C
VCEAGA1HW476M	6- 57	AB		C
VCEAGU1HW478M	6- 77	AL		C
VCKYCY1HB102K	9- 3	AA		C
VCKYCY1HB222K	9- 5	AA		C
VCKYCY1HF104Z	9- 6	AA		C
VCKYPU1HB101K	6- 52	AA		C
〃	8- 20	AA		C
VCKYPU1HB102K	6- 49	AA		C
〃	8- 18	AA		C
VCKYPU1HB222K	8- 21	AA		C
VCKYPU1HB331K	6- 51	AA		C
〃	6- 96	AA		C
〃	6-100	AA		C
VCKYPU1HB332K	6- 58	AA		C
VCKYPU1HB471K	6- 53	AA		C
〃	8- 19	AA		C
VCKYTV1HB103K	9- 4	AB		C
VCQYNA1HM103K	6- 50	AA		C
VCQYNA1HM224K	6- 94	AC		C
VCQYNA1HM333K	6- 54	AA		C
VCQYNU1HM104K	6- 55	AB		C
VHDCP301///-1	6- 74	AL		B
VHDDSS133HV-1	6- 27	AA		B
〃	8- 13	AA		B
VHDEU1Z////-1	6- 28	AB		B
VHD1N4002G/-1	6- 29	AA		B
VHEE102////-1	6- 33	AC		B
VHEMTZJ39C/-1	8- 9	AB		B
VHEMTZ5.1A/-1	6- 32	AC		B
VHEMTZ5.6A/-1	6- 31	AA		B
VHERD4.3EL1-1	6- 73	AA		B
VHERD6.2EB2-1	6- 30	AB		B
VHiHM62256L15	6- 66	BR		B

PARTS CODE	NO.	PRICE RANK	NEW MARK	PART RANK	
VHiH4728A91FS	8- 23	AX		B	
VHiH641510810	6- 3	BA		B	
VHiiR9393N/-1	6- 1	AD		B	
〃	9- 7	AD		B	
VHiLZ9AH30/-1	6- 4	BA		B	
VHiM54567P/-1	6- 69	AK		B	
VHiM66004FP-1	8- 24	AY		B	
VHiSN74HC00NS	6- 2	AC		B	
VHiSTA401A/-1	6- 68	AP		B	
VHiSTR2024/-1	6- 65	AR		B	
VHi27020RAU1A	6- 64	BD	N	B	
VHPPD410Pi/-1	9- 28	AE		B	
VHPSiR320ST3N	9- 29	AD		B	
VRD-RB2HY150J	9- 8	AA		C	
VRD-RC2EY000J	6- 36	AA		C	
〃	8- 1	AA		C	
VRD-RC2EY102J	6- 6	AA		C	
VRD-RC2EY103J	6- 5	AA		C	
〃	6- 95	AA		C	
VRD-RC2EY105J	8- 7	AA		C	
VRD-RC2EY123J	8- 12	AA		C	
VRD-RC2EY153G	6- 16	AA		C	
VRD-RC2EY202J	6- 10	AA		C	
〃	8- 4	AA		C	
VRD-RC2EY221J	6- 8	AA		C	
〃	8- 6	AA		C	
VRD-RC2EY222J	6- 14	AA		C	
〃	8- 11	AA		C	
VRD-RC2EY223J	6- 22	AA		C	
VRD-RC2EY272J	6- 17	AA		C	
VRD-RC2EY273G	8- 8	AA		C	
VRD-RC2EY273J	6- 26	AA		C	
VRD-RC2EY3R3J	8- 10	AA		C	
VRD-RC2EY330J	6- 25	AA		C	
〃	8- 5	AA		C	
VRD-RC2EY331J	6- 9	AA		C	
VRD-RC2EY332J	6- 11	AA		C	
VRD-RC2EY470J	6- 35	AA		C	
VRD-RC2EY472J	6- 20	AA		C	
〃	8- 3	AA		C	
VRD-RC2EY473J	6- 7	AA		C	
〃	8- 2	AA		C	
VRD-RC2EY562J	6- 21	AA		C	
VRD-RC2EY563J	6- 19	AA		C	
VRD-RC2EY623J	6- 13	AA		C	
VRD-RC2EY822G	6- 15	AA		C	
VRD-RC2EY912G	6- 18	AA		C	
VRNRC2EK1002F	6- 23	AA		C	
VRNRC2EK1201F	6- 24	AA		C	
VRNRC2EK1303F	6- 12	AA		C	
VRS-TS2AD101J	9- 9	AA		C	
VRS-TS2AD102J	9- 10	AA		C	
VRS-TS2AD103J	9- 11	AA		C	
VRS-TS2AD104J	9- 12	AA		C	
VRS-TS2AD110J	9- 13	AA		C	
VRS-TS2AD182J	9- 14	AA		C	
VRS-TS2AD223J	9- 15	AA		C	
VRS-TS2AD332J	9- 16	AA		C	
VRS-TS2AD333J	9- 17	AA		C	
VRS-TS2AD363J	9- 18	AA		C	
VRS-TS2AD393G	9- 19	AA		C	
VRS-TS2AD393J	9- 20	AA		C	
VRS-TS2AD432J	9- 21	AA		C	
VRS-TS2AD563J	9- 27	AA		C	
VRS-TS2AD622J	9- 22	AA		C	
VRS-TS2AD623G	9- 23	AB		C	
VRS-TS2AD821J	9- 26	AA		C	
VSDSC001-B/-1	6- 37	AA		B	
VSDSC001-B/CC	8- 22	AA		B	
VSUMX5/////-1	9- 25	AC		B	
VS2SA673-//-1	6- 38	AD		B	
VS2SC4153-/-1	6- 75	AG		B	
VS2SC4405-/-1	9- 24	AD		B	
VVK22MT03G/-1	8- 37	BM		B	
VVK7MT143G/-1	10- 3	AX		B	
【X】					
XBBSC30P06000	1- 8	AA		C	
〃	2- 8	AA		C	
XBBSC30P20000	3- 22	AA		C	
XBPSD30P06000	6- 93	AA		C	

PARTS CODE	NO.	PRICE RANK	NEW MARK	PART RANK	
XBPSD30P10000	6- 71	AA		C	
XBPSD40P06K00	4- 44	AA		C	
XBPSD40P06000	4- 47	AA		C	
XEBSD30P06000	1- 26	AA		C	
XEBSD30P08000	1- 18	AA		C	
〃	2- 18	AA		C	
〃	3- 7	AA		C	
XEBSD30P10000	1- 49	AA		C	
XHBSD30P12000	4- 26	AA		C	
XHBSD40P15000	4- 39	AA		C	
XHPSC30P08000	4- 41	AA		C	
〃	4- 49	AA		C	
XHPSD26P08000	2- 26	AA		C	
XHPSD30P06K00	1- 11	AA		C	
〃	2- 11	AA		C	
〃	3- 6	AA		C	
XHPSD30P06000	3- 9	AA		C	
XHPSD40P08KS0	3- 37	AA		C	
XJBSD30P10000	1- 22	AA		C	
〃	2- 22	AA		C	
〃	3- 38	AA		C	
XJPSD30P12X00	3- 12	AB		C	
XNESD40-32000	4- 24	AA		C	
XNESD60-50000	4- 29	AA		C	
XRESJ50-06000	4- 20	AA		C	
XUBSD30P08000	4- 5	AA		C	
〃	4- 53	AA		C	
XUBSD40P08000	3- 2	AA		C	
XUPSD23P08000	1- 32	AA		C	
〃	2- 32	AA		C	
XUPSD40P12000	3- 26	AA		C	
XWSSD40-10000	4- 23	AA		C	
XWSSD60-15000	4- 30	AA		C	

SHARP

COPYRIGHT © 1995 BY SHARP CORPORATION
All rights reserved.
Printed in Japan.
No part of this publication may be reproduced,
stored in a retrieval system, or transmitted,
in any form or by any means,
electronic, mechanical, photocopying, recording, or otherwise,
without prior written permission of the publisher.

SHARP CORPORATION
Information Systems Group
Quality & Reliability Control Center
Yamatokoriyama, Nara 639-11, Japan
1995 November Printed in Japan Ⓢ